bürkert
FLUID CONTROL SYSTEMS

Type 8619 Industrial Ethernet

Modbus TCP
PROFINET
EtherNet/IP

Digital communication
Digitale Kommunikation
Communication numérique

Supplement (from software version B.02.00)
Ergänzungsanleitung (ab Software-Version B.02.00)
Supplément (à partir de la version logicielle B.02.00)

MAN 1000338748 EN Version: D Status: RL (released | freigegeben) printed: 13.09.2022

MAN 1000338748 EN Version: D Status: RL (released | freigegeben) printed: 13.09.2022

Supplement to Operating Instructions 2204/03_EU-ML 00569043 / Original_EN

MAN 1000338748 EN Version: D Status: RL (released | freigegeben) printed: 13.09.2022

MAN 1000338748 EN Version: D Status: RL (released | freigegeben) printed: 13.09.2022

MAN 1000338748 EN Version: D Status: RL (released | freigegeben) printed: 13.09.2022

MAN 1000338748 EN Version: D Status: RL (released | freigegeben) printed: 13.09.2022

MAN 1000338748 EN Version: D Status: RL (released | freigegeben) printed: 13.09.2022

1 ABOUT THE SUPPLEMENT

The supplement describes the main features of the digital communication for the device Type 8619.

The objectives of the supplement are:

- to provide the key parameters for configuring the device Type 8619 when installed in an Ethernet network and
- to give examples of communication between the device Type 8619 and other equipment with the 3 different protocols.

For more information about the device Type 8619, refer to the Operating Instructions, available on the internet at: country.burkert.com

1.1 Symbols used

DANGER

Warns against an imminent danger.

▸ Failure to observe this warning results in death or in serious injury.

WARNING

Warns against a potentially dangerous situation.

▸ Failure to observe this warning can result in serious injury or even death.

CAUTION

Warns against a possible risk.

▸ Failure to observe this warning can result in substantial or minor injuries.

NOTICE

Warns against material damage.

Indicates additional information, advice or important recommendations.

Refers to information contained in these Operating Instructions or in other documents.

▸ Indicates an instruction to be carried out to avoid a danger, a warning or a possible risk.

→ Indicates a procedure to be carried out.

✔ Indicates the result of a specific instruction.

MAN 1000338748 EN Version: D Status: RL (released | freigegeben) printed: 13.09.2022

1.2 Validity

The supplement is valid for the devices Type 8619 until software version B.02.00 equipped with an Ethernet extension module from data version A.02. Information which concern only the version B.02.00 will be specified in the specific chapters.

→ Check the software version in the menu "Information ----► Versions ----► M0: Main ----► Firmware".

→ Check the data version of the Ethernet extension module M1 in the menu "Information ----► Versions ----► M1: Ethernet ----► Data".

→ Refer to the Operating Instructions of the device Type 8619.

1.3 Definitions

The word "device" used in the supplement refers to the controller/transmitter Type 8619.

The word "input" used in the supplement refers to data which enters the PLC (or client controller). It does not refer to data which enters the device Type 8619.

The word "output" used in the supplement refers to data which exits the PLC (or client controller). It does not refer to data which exits the device Type 8619.

2 GENERAL INFORMATION

2.1 Manufacturer's address and international contacts

Please use following address to contact the manufacturer of the device:

Burkert SAS

Rue du Giessen

BP 21

F-67220 TRIEMBACH-AU-VAL

You may also contact your local Bürkert sales office.

The addresses of our international sales offices are available on the internet at: country.burkert.com

2.2 Warranty conditions

The condition governing the legal warranty is the conforming use of the device Type 8619 in observance of the operating conditions specified in this supplement and in the Operating Instructions of the Type 8619.

2.3 Information on the internet

The Operating Instructions and technical data sheets for the device can be found on the internet at: country.burkert.com

MAN 1000338748 EN Version: D Status: RL (released | freigegeben) printed: 13.09.2022

3 SPECIFICATIONS COMMON TO ALL THE PROTOCOLS

The user can configure the device Type 8619 with only one of the 3 Industrial Ethernet protocols:

- Modbus TCP,
- PROFINET or
- EtherNet/IP.

3.1 Network topologies

The device Type 8619 has 2 RJ45 ports for connection to the following network topologies (depends on the protocol used):

Network topology	Available for
Tree 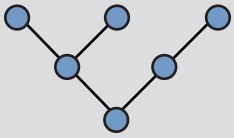	Modbus TCP EtherNet/IP PROFINET
Star 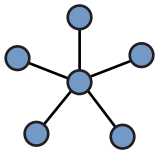	Modbus TCP EtherNet/IP PROFINET
Ring (closed daisy chain) 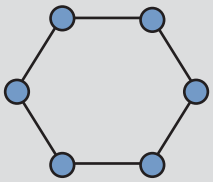	EtherNet/IP thanks to DLR topology (Device Level Ring), with at least one supervisor in the network.
	PROFINET thanks to MRP topology (Media Redundancy Protocol), with at least one manager in the network. The device Type 8619 is a client MRC (Media Redundancy Client)
Line (open daisy chain) 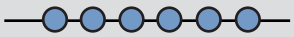	Modbus TCP EtherNet/IP PROFINET

MAN 1000338748 EN Version: D Status: RL (released | freigegeben) printed: 13.09.2022

3.2 Data exchange

The data exchange between the device Type 8619 and the other equipment of the network is only possible 25 s after the device start.

3.3 Watchdog (Modbus TCP only)

The watchdog is a multiple of the periodicity at which equipment of the network reads the variables of the device Type 8619.

3.4 Cycle time (PROFINET IO only)

The cycle time defines the periodicity at which equipment of the network reads the variables of the device Type 8619.

The cycle time is defined for each piece of equipment of the network.

In the device Type 8619, the variable values are updated every 300 ms.

3.5 RPI (EtherNet/IP only)

The RPI (Requested Packet Interval) defines the periodicity at which a piece of equipment of the network reads the packets containing the variables of the device Type 8619.

The RPI is defined for each piece of equipment of the network.

The default value of the RPI time for the device Type 8619 is 100 ms, but in the device Type 8619, the variable values are updated every 300 ms.

3.6 Data storage and sending format

The device Type 8619 stores and sends the values of all variables in "big-endian" format.

3.7 Type and length of objects used by the device Type 8619

Table 1: Type and length of objects used by the device Type 8619

Type (SI)	Access type	Description	Length (Byte)
INT	UINT16	16 bits: unsigned integer	2
UDINT	UINT32	32 bits: unsigned double integer	4
REAL	FLOAT32	32 bits: float value IEEE754	4
WORD	BITARR16	16 bits	2

MAN 1000338748 EN Version: D Status: RL (released | freigegeben) printed: 13.09.2022

4 MODBUS TCP

NOTICE

Wrong installation can damage the process.

- Configuration must only be carried out by qualified and skilled staff with the appropriate knowledge in Modbus TCP.

→ Refer also to the Operating Instructions of the device Type 8619.

4.1 Supported messages

The Modbus TCP uses a Client/Server access method. The device Type 8619 is a server.

Modbus TCP provides 4 types of messages: Request, Indication, Response and Confirmation. The device Type 8619 only uses the Indication and Response messages.

4.2 Function codes used by the device Type 8619

Function codes define the type of operation (function name) that applies to data. The function code is requested by the client equipment (for example a PLC).

Table 2 shows the operations supported by the device Type 8619.

Table 2: Modbus TCP functions supported by the device Type 8619

Function type			Function name	Function code (FC)
Data access	16-bit access	Physical input registers	Read input registers	4
		Internal registers or physical output registers	Read multiple holding registers	3
			Write multiple holding registers	16
			Read/write multiple registers	23

4.3 Exception codes supported by the device Type 8619

Exception codes are answers sent by the server (for example the device Type 8619) to a request from the client (for example a PLC).

If the request from the client is received without an error but cannot be processed by the server, the server replies with an exception code (see Table 3). Refer to the Modbus Organization for more details about the exception codes.

Table 3: List of exception codes supported by the device Type 8619

Exception code (hex)	Description
01	Illegal function
02	Illegal data address
03	Illegal data value
04	Slave device failure
05	Acknowledge

MAN 1000338748 EN Version: D Status: RL (released | freigegeben) printed: 13.09.2022

Exception code (hex)	Description
06	Slave device busy
07	Negative acknowledge
08	Memory parity error
0A	Gateway path unavailable
0B	Gateway target device failed to respond
FF	Extended exceptional response

4.4 Data register for the device Type 8619

The data registers to be read/written are defined by their addresses and by the number of registers they use.

All the addressed registers are of the type WORD.

The device Type 8619 has a data table with read/write access. The data of the data table can be of the types given in Table 4:

Table 4: Type of data supported by the device Type 8619

Data type	Type	Access	Example of use
Input register	Word	Read only	Analog input
Holding register	Word	Read/Write	Data that can be changed by the application

4.5 Register addressing of the device Type 8619

This section describes the register addressing of all the variables of the device Type 8619 (e.g. pH, AO1).

- To do the input register addressing of the main board variables, use Table 5 and Table 7.
- To do the input register addressing of the Ethernet extension module variables, use Table 5 and Table 8.
- To do the output register addressing of the Ethernet extension module variables, use Table 6 and Table 9.
- To do the input register addressing of the variables of an extension module (other than the Ethernet extension module), use Table 5 and Table 10 to Table 13.
- To do the input register addressing of the function variables, use Table 5 and Table 15 to Table 20.
- To do the input register addressing of the PVCs of the main board, use Table 5. The PVCs are process variables (PVs) whose values are constant as long as the user do not change them manually.

MAN 1000338748 EN Version: D Status: RL (released | freigegeben) printed: 13.09.2022

4.5.1 Address ranges of the modules, the functions and the PVCs

The entries of the network (network input and network output registers) used by the device are described in Table 5 and Table 6.

Table 5: Address ranges of the modules, the functions and the PVCs for the device Type 8619 - Network input registers

Extension module or function	Address range	
	dec	hex
Main board M0	0...31	0x0000...0x001F
Ethernet extension module M1	32...63	0x0020...0x003F
Extension module M2	64...95	0x0040...0x005F
Extension module M3 (reserved)	96...127	0x0060...0x007F
Extension module M4	128...159	0x0080...0x009F
Extension module M5	160...191	0x00A0...0x00BF
Extension module M6	192...223	0x00C0...0x00DF
Reserved	224...255	0x00E0...0x00FF
Function F1	256...263	0x0100...0x0107
Function F2	264...271	0x0108...0x010F
Function F3	272...279	0x0110...0x0117
Function F4	280...287	0x0118...0x011F
Function F5	288...295	0x0120...0x0127
Function F6	296...303	0x0128...0x012F
Function F7	304...311	0x0130...0x0137
Function F8	312...319	0x0138...0x013F
Function F9	320...327	0x0140...0x0147
Function F10	328...335	0x0148...0x014F
Function F11	336...343	0x0150...0x0157
Function F12	344...351	0x0158...0x015F
Reserved	352...511	0x0160...0x01FF
PVC	512...548	0x0200...0x0224

Table 6: Address ranges of the different extension modules for the device Type 8619 - Network output registers

Extension module	Address range	
	dec	hex
Ethernet extension module M1	0...39	0x0000...0x0027

MAN 1000338748 EN Version: D Status: RL (released | freigegeben) printed: 13.09.2022

4.5.2 Variables of the modules

This section describes the variables of each module and the start addresses of the variables.

→ To define the address of a variable, add the address range of the module (given in Table 5) and the variable start address in the module, given in Table 7 to Table 13.

→ For more information on the type (SI) refer to chapter 3.7.

Table 7: Variables of the main board M0

Module	Variable start address (in WORD) dec	hex	Variable name	Variable description	Type (SI)	Read/ Write	Unit
Main	0	0	ID [1]	Identification of the main board	INT	R	-
Main	1	1	Module Status [2]	Status of the main board	INT	R	-
Main	2	2	M1-M3 Status [2]	Status of the extension modules	INT	R	-
Main	3	3	M4-M6 Status [2]	Status of the extension modules	INT	R	-
Main	4	4	SystemSwitch [2]	Status of the SystemSwitch	INT	R	-
Main	5	5	DI1 Status [2]	Status of the digital input 1	INT	R	-
Main	6	6	DI2 Status [2]	Status of the digital input 2	INT	R	-
Main	7	7	Reserved	-	INT	R	-
Main	8	8	DO1	Value of the digital output 1	INT	R	0: OFF (default) 1: ON 2: PWM or FastPWM 3: PFM 4: Pulse
Main	9	9	DO2	Value of the digital output 2	INT	R	0: OFF (default) 1: ON 2: PWM or FastPWM 3: PFM 4: Pulse
Main	10	A	AO1	Value of the analog output 1	REAL	R	mA
Main	12	C	AO2	Value of the analog output 2	REAL	R	mA
Main	14	E	DI1Frequency	Frequency value of the digital input 1	REAL	R	Hz
Main	16	10	DI1Flow	Flow value of the digital input 1	REAL	R	L/min
Main	18	12	DI1TotA	Value of the totaliser A on the digital input 1	REAL	R	L
Main	20	14	DI1TotB	Value of the totaliser B on the digital input 1	REAL	R	L

1) Refer to chapter 7.1 to find the identification value (ID) of the main board.

2) Refer to chapter 8.1 to find the status value of the main board.

MAN 1000338748 EN Version: D Status: RL (released | freigegeben) printed: 13.09.2022

Module	Variable start address (in WORD) dec	hex	Variable name	Variable description	Type (SI)	Read/ Write	Unit
Main	22	16	DI2Frequency	Frequency value of the digital input 2	REAL	R	Hz
Main	24	18	DI2Flow	Flow value of the digital input 2	REAL	R	L/min
Main	26	1A	DI2TotA	Value of the totaliser A on the digital input 2	REAL	R	L
Main	28	1C	DI2TotB	Value of the totaliser B on the digital input 2	REAL	R	L
Main	30...31	1E...1F	Reserved	-	REAL	R	-

Table 8: Variables of the Ethernet extension module - Inputs

Module	Variable start address (in WORD) dec	hex	Variable name	Variable description	Type (SI)	Read/ Write
M1	32	20	ID [1)]	Identification of the Ethernet extension module	INT	R
M1	33	21	Module Status [2)]	Status of the Ethernet extension module	INT	R
M1	34...63	22...3F	Reserved	-	INT	R

1) Refer to chapter 7.1 to find the identification value (ID) of the main board.

2) Refer to chapter 8.1 to find the status value of the main board.

MAN 1000338748 EN Version: D Status: RL (released | freigegeben) printed: 13.09.2022

Table 9: Variables of the Ethernet extension module - Outputs

Module	Variable start address (in WORD) dec	hex	Variable name	Variable description	Type (SI)	Read/ Write	Unit
M1	0	0	PVN1	Process Value Network 1	REAL	R/W	3)
M1	2	2	PVN2	Process Value Network 2	REAL	R/W	3)
M1	4	4	PVN3	Process Value Network 3	REAL	R/W	3)
M1	6	6	PVN4	Process Value Network 4	REAL	R/W	3)
M1	8	8	PVN5	Process Value Network 5	REAL	R/W	3)
M1	10	A	PVN6	Process Value Network 6	REAL	R/W	3)
M1	12	C	PVN7	Process Value Network 7	REAL	R/W	3)
M1	14	E	PVN8	Process Value Network 8	REAL	R/W	3)
M1	16	10	PVN9	Process Value Network 9	REAL	R/W	3)
M1	18	12	PVN10	Process Value Network 10	REAL	R/W	3)
M1	20	14	PVN11	Process Value Network 11	REAL	R/W	3)
M1	22	16	PVN12	Process Value Network 12	REAL	R/W	3)
M1	24	18	PVN13	Process Value Network 13	REAL	R/W	3)
M1	26	1A	PVN14	Process Value Network 14	REAL	R/W	3)
M1	28	1C	PVN15	Process Value Network 15	REAL	R/W	3)
M1	30	1E	PVN16	Process Value Network 16	REAL	R/W	3)
M1	32	20	PVN17	Process Value Network 17	REAL	R/W	3)
M1	34	22	PVN18	Process Value Network 18	REAL	R/W	3)
M1	36	24	PVN19	Process Value Network 19	REAL	R/W	3)
M1	38...39	26...27	PVN20	Process Value Network 20	REAL	R/W	3)

1) Refer to chapter 7.1 to find the identification value (ID) of the extension module.

2) Refer to chapter 8.2 to find the status value of the Ethernet extension module.

3) To select the unit of the PVN, refer to the Operating Instructions of the device Type 8619.

MAN 1000338748 EN Version: D Status: RL (released | freigegeben) printed: 13.09.2022

Table 10: Variables of the Input extension module

Module	Variable start address (in WORD) dec	hex	Variable name	Variable description	Type (SI)	Read/ Write	Unit
Mx [1]	N+0 [2]	N+0 [2]	ID [3]	Identification of the extension module	INT	R	-
Mx [1]	N+1 [2]	N+1 [2]	Module Status [4]	Status of the extension module	INT	R	-
Mx [1]	N+2 [2]	N+2 [2]	DI1 Status [4]	Status of the digital input 1	INT	R	-
Mx [1]	N+3 [2]	N+3 [2]	DI2 Status [4]	Status of the digital input 2	INT	R	-
Mx [1]	N+4 [2]	N+4 [2]	AI1 Status [4]	Status of the analog input 1	INT	R	-
Mx [1]	N+5 [2]	N+5 [2]	AI2 Status [4]	Status of the analog input 2	INT	R	-
Mx [1]	N+6 [2]	N+6 [2]	DI1Frequency	Frequency value of the digital input 1	REAL	R	Hz
Mx [1]	N+8 [2]	N+8 [2]	DI1Flow	Flow value of the digital input 1	REAL	R	L/min
Mx [1]	N+10 [2]	N+A [2]	DI1TotA	Value of the totaliser A on digital input 1	REAL	R	L
Mx [1]	N+12 [2]	N+C [2]	DI1TotB	Value of the totaliser B on the digital input 1	REAL	R	L
Mx [1]	N+14 [2]	N+E [2]	DI2Frequency	Frequency value of the digital input 2	REAL	R	Hz
Mx [1]	N+16 [2]	N+10 [2]	DI2Flow	Flow value of the digital input 2	REAL	R	L/min
Mx [1]	N+18 [2]	N+12 [2]	DI2TotA	Value of the totaliser A on the digital input 2	REAL	R	L
Mx [1]	N+20 [2]	N+14 [2]	DI2TotB	Value of the totaliser B on the digital input 2	REAL	R	L
Mx [1]	N+22 [2]	N+16 [2]	AI1Raw	Analog input 1, current or voltage signal	REAL	R	V
Mx [1]	N+24 [2]	N+18 [2]	AI1	Value of the analog input 1	REAL	R	[5]
Mx [1]	N+26 [2]	N+1A [2]	AI2Raw	Analog input 2, current or voltage signal	REAL	R	V
Mx [1]	N+28 [2]	N+1C [2]	AI2	Value of the analog input 2	REAL	R	[5]
Mx [1]	N+(30...31) [2]	N+(1E...1F) [2]	Reserved	-	REAL	R	-

1) Mx: the extension module can be plugged into slot M2, M4, M5 or M6.

2) N is the address range of the extension module. It depends on the slot the extension module is plugged into. Refer to Table 5.

3) Refer to chapter 7.1 to find the identification value (ID) of the extension module.

4) Refer to chapter 8.4 to find the status value of the Input extension module.

5) Refer to chapter 9 to find the value of the unit.

MAN 1000338748 EN Version: D Status: RL (released | freigegeben) printed: 13.09.2022

Table 11: Variables of the Output extension module

Module	Variable start address (in WORD) dec	hex	Variable name	Variable description	Type (SI)	Read/ Write	Unit
Mx [1]	N+0 [2]	N+0 [2]	ID [3]	Identification of the extension module	INT	R	-
Mx [1]	N+1 [2]	N+1 [2]	Module Status [4]	Status of the extension module	INT	R	-
Mx [1]	N+2 [2]	N+2 [2]	Reserved	-	INT	R	-
Mx [1]	N+3 [2]	N+3 [2]	DO1	Value of digital output 1	INT	R	0: OFF (default) 1: ON 2: PWM or FastPWM 3: PFM
Mx [1]	N+4 [2]	N+4 [2]	DO2	Value of digital output 2	INT	R	0: OFF (default) 1: ON 2: PWM or FastPWM 3: PFM
Mx [1]	N+5 [2]	N+5 [2]	Reserved	-	INT	R	-
Mx [1]	N+6 [2]	N+6 [2]	AO1	Value of analog output 1	REAL	R	mA
Mx [1]	N+8 [2]	N+8 [2]	AO2	Value of analog output 2	REAL	R	mA
Mx [1]	N+(10...31) [2]	N+(A...1F) [2]	Reserved	-	REAL	R	-

1) Mx: the extension module can be plugged into slot M2, M4, M5 or M6.

2) N is the address range of the extension module. It depends on the slot the extension module is plugged into. Refer to Table 5.

3) Refer to chapter 7.1 to find the identification value (ID) of the extension module.

4) Refer to chapter 8.5 to find the status value of the Output extension module.

MAN 1000338748 EN Version: D Status: RL (released | freigegeben) printed: 13.09.2022

Table 12: Variables of the Conductivity extension module

Module	Variable start address (in WORD)		Variable name	Variable description	Type (SI)	Read/ Write	Unit
	dec	hex					
Mx [1]	N+0 [2]	N+0 [2]	ID [3]	Identification of the extension module	INT	R	-
Mx [1]	N+1 [2]	N+1 [2]	Module Status [4]	Status of the extension module	INT	R	-
Mx [1]	N+2 [2]	N+2 [2]	Temp. Status [4]	Status of the temperature	INT	R	-
Mx [1]	N+3 [2]	N+3 [2]	Cond. Status [4]	Status of the conductivity	INT	R	-
Mx [1]	N+4 [2]	N+4 [2]	Reserved	-	INT	R	-
Mx [1]	N+5 [2]	N+5 [2]	Reserved	-	INT	R	-
Mx [1]	N+6 [2]	N+6 [2]	RTD	Input resistance of the temperature stage	REAL	R	Ω
Mx [1]	N+8 [2]	N+8 [2]	Temperature	Temperature value	REAL	R	°C
Mx [1]	N+10 [2]	N+A [2]	Conductivity	Conductivity value	REAL	R	µS/cm
Mx [1]	N+12 [2]	N+C [2]	Resistivity	Resistivity value	REAL	R	Ω.cm
Mx [1]	N+14 [2]	N+E [2]	TDS	Quantity of dissolved solids	REAL	R	ppm
Mx [1]	N+16 [2]	N+10 [2]	Concentration	Mass concentration	REAL	R	%
Mx [1]	N+(18...31) [2]	N+(12...1F) [2]	Reserved	-	REAL	R	-

1) Mx: the extension module can be plugged into slot M2, M4, M5 or M6.

2) N is the address range of the extension module. It depends on the slot the extension module is plugged into. Refer to Table 5.

3) Refer to chapter 7.1 to find the identification value (ID) of the extension module.

4) Refer to chapter 8.6 to find the status value of the Conductivity extension module.

MAN 1000338748 EN Version: D Status: RL (released | freigegeben) printed: 13.09.2022

Table 13: Variables of the pH/ORP extension module

Module	Variable start address (in WORD) dec	hex	Variable name	Variable description	Type (SI)	Read/ Write	Unit
Mx [1]	N+0 [2]	N+0 [2]	ID [3]	Identification of the extension module	INT	R	-
Mx [1]	N+1 [2]	N+1 [2]	Module Status [4]	Status of the extension module	INT	R	-
Mx [1]	N+2 [2]	N+2 [2]	Temp. Status [4]	Status of the temperature	INT	R	-
Mx [1]	N+3 [2]	N+3 [2]	pH/ORP Status [4]	Status of the pH or of the oxidation reduction potential	INT	R	-
Mx [1]	N+4 [2]	N+4 [2]	Reserved	-	INT	R	-
Mx [1]	N+5 [2]	N+5 [2]	Reserved	-	INT	R	-
Mx [1]	N+6 [2]	N+6 [2]	RTD	Input resistance of the temperature stage	REAL	R	Ω
Mx [1]	N+8 [2]	N+8 [2]	Temperature	Temperature value	REAL	R	°C
Mx [1]	N+10 [2]	N+A [2]	mV(pH)	pH sensor value in mV	REAL	R	mV
Mx [1]	N+12 [2]	N+C [2]	mV(ORP)	Oxidation reduction potential value in mV	REAL	R	mV
Mx [1]	N+14 [2]	N+E [2]	pH	pH sensor value	REAL	R	pH
Mx [1]	N+16 [2]	N+10 [2]	Impedance Glass	Impedance of the glass electrode	REAL	R	Ω
Mx [1]	N+18 [2]	N+12 [2]	Impedance Ref	Impedance of the reference electrode	REAL	R	Ω
Mx [1]	N+(20...31) [2]	N+(14...1F) [2]	Reserved	-	REAL	R	-

Table 14: Variables of an empty slot on the device Type 8619

Module	Variable start address (in WORD) dec	hex	Variable name	Variable description	Type (SI)	Read/ Write	Unit
Mx [5]	N+0 [2]	N+0 [2]	ID [3]	Identification of the extension module	INT	R	-
Mx [5]	N+1 [2]	N+1 [2]	Module Status [4]	Status of the extension module	INT	R	-
Mx [5]	N+(2...31) [2]	N+(2...1F) [2]	Reserved	-	REAL	R	-

1) Mx: the extension module can be plugged into slot M2, M4, M5 or M6.

2) N is the address range of the extension module. It depends on the slot the extension module is plugged into. Refer to Table 5.

3) Refer to chapter 7.1 to find the identification value (ID) of the extension module.

4) Refer to chapter 8.7 to find the status value of the pH/ORP extension module.

5) Mx: the empty slots can be slots M2, M3, M4, M5 or M6

MAN 1000338748 EN Version: D Status: RL (released | freigegeben) printed: 13.09.2022

4.5.3 Variables of the functions

This section describes the variables of the different function types and the start addresses of these variables.

The following function types are available:

- A+B / A-B / A/B / A*B / MATH / PASS / REJECT / DEVIAT, refer to Table 15.
- PROP, refer to Table 16.
- ON/OFF, refer to Table 17.
- PID, refer to Table 18.
- TIME DOSING, refer to Table 19.
- VOLUME DOSING, refer to Table 20.

→ To define the address of a variable, add the address range of the function (given in Table 5) and the variable start address, given in Table 15...Table 20.

→ For more information on the type (SI) refer to chapter 3.7.

*Table 15: Variables of the functions A+B / A-B / A/B / A*B / MATH / PASS / REJECT / DEVIAT*

Function	Variable start address (in WORD)	Variable name	Variable description	Type (SI)	Read/ Write	Unit
Fx [1]	N+0 [2]	ID [3]	Identification of the function	INT	R	
Fx [1]	N+1 [2]	Function Status [4]	Status of the function	INT	R	
Fx [1]	N+2 [2]	Result [5]	Result of the function	REAL	R	[5]
Fx [1]	N+4 [2]	Reserved	-	REAL	R	
Fx [1]	N+(6...7) [2]	Reserved	-	REAL	R	

Table 16: Variables of the function PROP

Function	Variable start address (in WORD)	Variable name	Variable description	Type (SI)	Read/ Write	Unit
Fx [1]	N+0 [2]	ID [3]	Identification of the function	INT	R	-
Fx [1]	N+1 [2]	Function Status [4]	Status of the function	INT	R	-
Fx [1]	N+2 [2]	Command	Value of the command	REAL	R	%
Fx [1]	N+4 [2]	Reserved	-	REAL	R	-
Fx [1]	N+(6...7) [2]	Reserved	-	REAL	R	-

1) Fx is the function number (F1...F12).

2) N is the address range of the function and depends on the function number. Refer to Table 5.

3) Refer to chapter 7.2 to find the identification value (ID) of the function.

4) Refer to chapter 8.8...chapter 8.14 to find the status value of the related function.

5) Refer to chapter 9 to find the value of the unit.

MAN 1000338748 EN Version: D Status: RL (released | freigegeben) printed: 13.09.2022

Table 17: Variables of the function ON/OFF

Function	Variable start address (in WORD)	Variable name	Variable description	Type (SI)	Read/ Write	Unit
Fx [1]	N+0 [2]	ID [3]	Identification of the function	INT	R	-
Fx [1]	N+1 [2]	Function Status [4]	Status of the function	INT	R	-
Fx [1]	N+2 [2]	Command	Value of the command	REAL	R	%
Fx [1]	N+4 [2]	SetPoint	Value of the setpoint	REAL	R	[5]
Fx [1]	N+(6...7) [2]	Reserved	-	REAL	R	-

Table 18: Variables of the function PID

Function	Variable start address (in WORD)	Variable name	Variable description	Type (SI)	Read/ Write	Unit
Fx [1]	N+0 [2]	ID [3]	Identification of the function	INT	R	-
Fx [1]	N+1 [2]	Function Status [4]	Status of the function	INT	R	-
Fx [1]	N+2 [2]	Command 1	Value of the command 1	REAL	R	%
Fx [1]	N+4 [2]	Command 2	Value of the command 2	REAL	R	%
Fx [1]	N+(6...7) [2]	SetPoint	Value of the setpoint	REAL	R	[5]

Table 19: Variables of the function Time dosing

Function	Variable start address (in WORD)	Variable name	Variable description	Type (SI)	Read/ Write	Unit
Fx [1]	N+0 [2]	ID [3]	Identification of the function	INT	R	-
Fx [1]	N+1 [2]	Function Status [5]	Status of the function	INT	R	-
Fx [1]	N+2 [2]	Command 1	Value of the command 1	REAL	R	%
Fx [1]	N+4 [2]	Command 2	Value of the command 2	REAL	R	%
Fx [1]	N+(6...7) [2]	Reserved	-	REAL	R	-

Table 20: Variables of the function Volume dosing

Function	Variable start address (in WORD)	Variable name	Variable description	Type (SI)	Read/ Write	Unit
Fx [1]	N+0 [2]	ID [2]	Identification of the function	INT	R	-
Fx [1]	N+1 [2]	Function Status [3]	Status of the function	INT	R	-
Fx [1]	N+2 [2]	Command	Value of the command	REAL	R	%
Fx [1]	N+4 [2]	SetPoint	Value of the setpoint	REAL	R	[5]
Fx [1]	N+(6...7) [2]	Volume	Value of the total volume metered	REAL	R	[5]

1) Fx is the function number (F1...F12).

2) N is the address range of the function and depends on the function number. Refer to Table 5.

3) Refer to chapter 7.2 to find the identification value (ID) of the function.

4) Refer to chapter 8.8...chapter 8.14 to find the status value of the related function.

5) Refer to chapter 9 to find the value of the unit.

MAN 1000338748 EN Version: D Status: RL (released | freigegeben) printed: 13.09.2022

4.5.4 Variables of the PVCs

This section describes the variables of the PVCs and the start addresses of these variables. The PVCs are process variables whose value can be defined by the user. Refer to the Operating Instructions of the device Type 8619.

The data of Table 21 are valid for devices equipped with an Ethernet extension module M1 from data version A.02.

→ On the device Type 8619, check the data version in the menu "Information ----► Versions ----► M1: Ethernet ----► Data".

→ To get more information on the type (SI) refer to chapter 3.7.

Table 21: Variables of the PVC

PVC	Variable start address (in WORD) dec	hex	Variable name	Variable description	Type (SI)	Read/ Write	Unit
-	512	200	ID [1]	Identification of all PVCs	INT	R	-
PVC 1	513	201	PVC1 Status [2]	Status of the constant PVC1	INT	R	-
	514	202	PVC1 Value	Value of the constant PVC1	REAL	R	[3]
PVC 2	516	204	PVC2 Status [2]	Status of the constant PVC2	INT	R	-
	517	205	PVC2 Value	Value of the constant PVC2	REAL	R	[3]
PVC 3	519	207	PVC3 Status [2]	Status of the constant PVC3	INT	R	-
	520	208	PVC3 Value	Value of the constant PVC3	REAL	R	[3]
PVC 4	522	20A	PVC4 Status [2]	Status of the constant PVC4	INT	R	-
	523	20B	PVC4 Value	Value of the constant PVC4	REAL	R	[3]
PVC 5	525	20D	PVC5 Status [2]	Status of the constant PVC5	INT	R	-
	526	20E	PVC5 Value	Value of the constant PVC5	REAL	R	[3]
PVC 6	528	210	PVC6 Status [2]	Status of the constant PVC6	INT	R	-
	529	211	PVC6 Value	Value of the constant PVC6	REAL	R	[3]
PVC 7	531	213	PVC7 Status [2]	Status of the constant PVC7	INT	R	-
	532	214	PVC7 Value	Value of the constant PVC7	REAL	R	[3]
PVC 8	534	216	PVC8 Status [2]	Status of the constant PVC8	INT	R	-
	535	217	PVC8 Value	Value of the constant PVC8	REAL	R	[3]
PVC 9	537	219	PVC9 Status [2]	Status of the constant PVC9	INT	R	-
	538	21A	PVC9 Value	Value of the constant PVC9	REAL	R	[3]
PVC 10	540	21C	PVC10 Status [2]	Status of the constant PVC10	INT	R	-
	541	21D	PVC10 Value	Value of the constant PVC10	REAL	R	[3]

1) Refer to chapter 7.3 to find the identification value (ID) of the PVC.

2) Refer to chapter 8.15 to find the status value of the related PVC.

3) Refer to chapter 9 to find the value of the unit.

MAN 1000338748 EN Version: D Status: RL (released | freigegeben) printed: 13.09.2022

PVC	Variable start address (in WORD) dec	hex	Variable name	Variable description	Type (SI)	Read/ Write	Unit
PVC 11	543	21F	PVC11 Status [2]	Status of the constant PVC11	INT	R	-
	544	220	PVC11 Value	Value of the constant PVC11	REAL	R	[3]
PVC 12	546	222	PVC12 Status [2]	Status of the constant PVC12	INT	R	-
	547..548	223..224	PVC12 Value	Value of the constant PVC12	REAL	R	[3]

MAN 1000338748 EN Version: D Status: RL (released | freigegeben) printed: 13.09.2022

1) Refer to chapter 7.3 to find the identification value (ID) of the PVC.

2) Refer to chapter 8.15 to find the status value of the related PVC.

3) Refer to chapter 9 to find the value of the unit.

4.6 Example: reading out a pH value and writing a value on PVN1

This example uses the communication between the device Type 8619 and a PLC Type Siemens S7-1200.

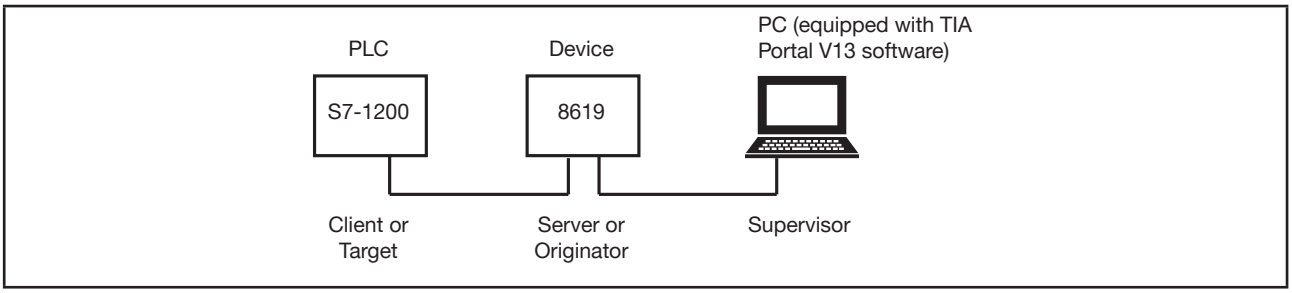

Fig. 1 : Example of an open daisy chain network for the Modbus TCP protocol

The device has the following hardware configuration:

- a main board M0,
- an Ethernet extension module M1,
- 4 extension modules: Conductivity module in slot M2, pH/ORP module in slot M4, Output module in slot M5 and Input module in slot M6.

To exchange data between the device Type 8619 and the PLC via the Modbus TCP network, do the following steps:

1. If the DHCP-mode is deactivated, do the settings related to Modbus TCP on the device Type 8619 (see chapter 4.6.1).
2. Check the communication between the device and the PC (see chapter 4.6.2).

On the PC connected to the network:

3. Create the Modbus TCP communication commands "read" and "write" (see chapter 4.6.3).
4. Create the image of the device configuration in the TIA Portal software (see chapter 4.6.4).
5. Associate the variables of the device Type 8619 with the PLC, that can be read by the PLC (see chapter 4.6.5).
6. Associate the variables of the device Type 8619 with the PLC, that can be written by the PLC (see chapter 4.6.6).
7. Create the watch table of the PLC (see chapter 4.6.7).
8. Transfer the watch table from the PC to the PLC (see chapter 4.6.8).
9. Monitor the variables between the device Type 8619 and the PLC (see chapter 4.6.9).
10. Force the variables between the device Type 8619 and the PLC (see chapter 4.6.10).

MAN 1000338748 EN Version: D Status: RL (released | freigegeben) printed: 13.09.2022

4.6.1 Doing the settings on the device Type 8619

The DHCP mode must be deactivated to do this step.

→ Make sure the DHCP mode is deactivated on the device Type 8619

1. Select the protocol used:

→ Go to "Menu ----► Parameters ----► M1:Ethernet ----► Protocol".

→ Select “Modbus TCP”

2. Set the IP address of the device. To manually set the IP address:

→ Go to "Menu ----► Parameters ----► M1:Ethernet ----► IP settings ----► Mode ----► Manual".

→ Go to "Menu ----► Parameters ----► M1:Ethernet ----► IP settings ----► IP address".

→ Enter the IP address (default value is 0.0.0.0).

3. Set the Netmask of the device:

→ Go to "Menu ----► Parameters ----► M1:Ethernet ----► IP settings ----► Netmask".

→ Enter the Netmask (default value is 0.0.0.0).

4. Set the Gateway address of the device:

→ Go to "Menu ----► Parameters ----► M1:Ethernet ----► IP settings ----► Gateway".

→ Enter the Gateway address (default value is 0.0.0.0).

5. If necessary, select the unit of the process values network PVN:

→ Refer to the Operating Instructions of the device Type 8619.

✔ The settings related to the Modbus TCP protocol are completed on the device.

→ To validate the setting, restart the device Type 8619.

4.6.2 Checking the communication between the device and the PC

→ Use a PC to send a ping to the device Type 8619 with the configured IP address.

✔ If the device answers, the device is ready to communicate with the PLC.

4.6.3 Creating the Modbus TCP communication commands "read" and "write"

The following procedure uses the software "TIA Portal V13" installed on the PC. The software TIA Portal is used to configure the PLC Siemens S7-1200 and the other equipment of the network.

→ Before using the TIA Portal V13 software, read the related Operating Instructions and the Operating Instructions of the PLC.

→ Start the software TIA Portal V13.

→ Make sure the network settings (name, IP address,...) have been done for the PLC.

MAN 1000338748 EN Version: D Status: RL (released | freigegeben) printed: 13.09.2022

In TIA Portal V13:

→ In tab "Devices" of the "Project tree", select the PLC used.

→ Go to " Program blocks ----► add a new block": a window "Add new block" is displayed.

→ If necessary, enter a name for the program block, i.e. "MODBUS_CONFIGURATION", click "Data block" and in the field "Type" select "Global DB".

→ Validate with OK: the data block opens.

1. Create a READ variable class of the type "TCON_IP_V4":

→ In the field "Name", enter a name for the new variable, i.e. "READ".

→ In the field "Data type", enter "TCON_IP_V4". Validate and expand to see all the fields of the created variable.

→ Fill in all the fields of "TCON_IP_V4" (refer to the Operating Instructions of the PLC). Insert the IP address of the device Type 8619 (find it in chapter 4.6.1) in the field "Remote Address".

2. In the same data block, create a WRITE variable class of the type "TCON_IP_V4":

→ In the field "Name", enter a name for the new variable, i.e. "WRITE".

→ In the field "Data type", enter "TCON_IP_V4". Validate and expand to see all the fields of the created variable.

→ Fill in all the fields of "TCON_IP_V4" (refer to the Operating Instructions of the PLC). Insert the IP address of the device Type 8619 (find it in chapter 4.6.1) in the field "Remote Address".

✔ The Modbus TCP communication commands "read" and "write" are created.

4.6.4 Creating the image of the device configuration in the TIA Portal software

- All the signals (I/O of the device Type 8619) going from the device Type 8619 to the PLC are considered as inputs by the PLC.
- All the signals (PVN's) going from the PLC to the device Type 8619 are considered as outputs by the PLC.

→ Before using the TIA Portal V13 software, read the related Operating Instructions and the Operating Instructions of the PLC.

To find out the address of the data, refer to chapter 4.5.1 Address ranges of the modules, the functions and the PVCs, page 14.

In TIA PORTAL V13:

→ In tab "Devices" of the "Project tree", select the PLC used.

→ Go to " Program blocks ----► add a new block": a window "Add new block" is displayed.

→ If necessary, enter a name for the program block, i.e. "Transmitted data", click "Data block" and in the field "Type" select "Global DB".

→ Validate with OK: the data block opens.

MAN 1000338748 EN Version: D Status: RL (released | freigegeben) printed: 13.09.2022

1. For our example, create a pH variable of the type "Real", to read the pH value, according to Table 13: Variables of the pH/ORP extension module, page 21:

→ In the field "Name", enter a name for the new variable, i.e. "pH".

→ In the field "Data type", enter "Real".

2. For our example, create a PVN1 variable of the type "Real", to write a PVN value, according to Table 9: Variables of the Ethernet extension module - Outputs, page 17:

→ In the field "Name", enter a name for the new variable, i.e. "PVN1".

→ In the field "Data type", enter "Real".

3. Create the other variables that are needed (see chapter 4.5).

✔ The image of the device configuration is created in TIA Portal.

4.6.5 Associating the variables of the device Type 8619 with the PLC, that can be read by the PLC

→ Before using the TIA Portal V13 software, read the related Operating Instructions and the Operating Instructions of the PLC.

In TIA Portal V13:

→ In tab "Devices" of the "Project tree", select the PLC used.

→ Go to " Program blocks ----► Main[OB1]": "Program blocks ----► Main [OB1]" is displayed.

→ In the "Instructions" library, open the "Communication" menu and search for the instruction "MB_CLIENT" in the menu tree "Others ----► MODBUS TCP".

→ Drag and drop the icon of the "MB_CLIENT" from the "Instructions" library into the "Main [OB1]" view: a window "Call options" is displayed.

→ If necessary, enter a name for the MB_CLIENT, e.g. "MB_CLIENT_DB_READ", and validate: the "Block interface" view with the instruction "MB_CLIENT" is displayed.

→ Fill in the REQ parameter (refer to the Operating Instructions of the PLC).

→ Fill in the DISCONNECT parameter (refer to the Operating Instructions of the PLC).

→ Fill in the MB_MODE parameter. To "read the pH value", set the MB_MODE to 0.

→ Fill in the MB_DATA_ADDR parameter as follows:

- The pH/ORP extension module is plugged into slot M4. According to Table 5, page 14, the address range of the extension module M4 is [128...159].
- According to Table 13, page 21, the pH value is addressed at 14.
- The start address for reading inputs in the PLC is 30001 (Function Code 4 "Read input registers"). Make sure the address is correct in the Operating Instructions of the PLC used.
- RESULT: for the pH value, MB_DATA_ADDR takes the value:
  MB_DATA_ADDR = 128 + 14 + 30001 = 30143 for the pH value.

MAN 1000338748 EN Version: D Status: RL (released | freigegeben) printed: 13.09.2022

→ Fill in the MB_DATA_LEN parameter (refer to the Operating Instructions of the PLC and chapter 3.7, page 11). According to this table, the length of a variable type "REAL" is 2 (1 REAL is 2 WORD).

→ Fill in the MB_DATA_PTR parameter with the name of the file created in chapter 4.6.3 and with the extension "READ". To read the pH value, set the MB_DATA_PTR to "READ.pH".

→ Fill in the CONNECT parameter with the name of the communication commands file created in chapter 4.6.3 and with the extension "READ" (refer to the Operating Instructions of the PLC).

✔ The variables of the device Type 8619 that can be read by the PLC are assigned to the PLC.

→ Fill in the other parameters needed by the PLC.

4.6.6 Associating the variables of the device Type 8619 with the PLC, that can be written by the PLC

→ Before using the TIA Portal V13 software, read the related Operating Instructions and the Operating Instructions of the PLC.

In TIA Portal V13:

→ In tab "Devices" of the "Project tree", select the PLC used.

→ Go to " Program blocks ----► Main[OB1]": "Program blocks ----► Main [OB1]" is displayed.

→ In the "Instructions" library, open the "Communication" menu and search for the instruction "MB_CLIENT" in the menu tree "Others ----► MODBUS TCP".

→ Drag and drop the icon of the "MB_CLIENT" from the "Instructions" library into the "Main [OB1]" view: a window "Call options" is displayed.

→ If necessary, enter a name for the MB_CLIENT, i.e. "MB_CLIENT_DB_WRITE", and validate: the "Block interface" view with the instruction "MB_CLIENT" is displayed.

→ Fill in the REQ parameter (refer to the Operating Instructions of the PLC).

→ Fill in the DISCONNECT parameter (refer to the Operating Instructions of the PLC).

→ Fill in the MB_MODE parameter, set the MB_MODE to 1.

→ Fill in MB_DATA_ADDR parameter as follows:

- The Ethernet extension module is plugged into slot M1. According to Table 6, page 14, the address range of the PVN values is [0..39].
- According to Table 9, page 17, the value of the PVN1 is addressed at 0.
- The start address for writing outputs in the PLC is 40001 (Function Code 3 "Read multiple holding registers"). Make sure the address is correct in the Operating Instructions of the PLC used.
- RESULT: for PVN1, MB_DATA_ADDR takes the value:
  MB_DATA_ADDR = 0 + 0 + 40001 = 40001

→ Fill in the MB_DATA_LEN parameter (refer to the Operating Instructions of the PLC and chapter 3.7, page 11). According to this table, the length of a variable type "REAL" is 2 (1 REAL is 2 WORD).

→ Fill in the MB_DATA_PTR parameter with the name of the file created in chapter 4.6.4 (e.g. PVN1) and with the extension "WRITE" (refer to the Operating Instructions of the PLC).

MAN 1000338748 EN Version: D Status: RL (released | freigegeben) printed: 13.09.2022

→ Fill in the CONNECT parameter with the name of the communication commands file created in chapter 4.6.3 and with the extension "WRITE". To write the PVN1 value, set the MB_DATA_PTR to "PVN1.WRITE".

✔ The variables of the device Type 8619 that can be written by the PLC are assigned to the PLC.

→ Fill in the other parameters needed by the PLC.

4.6.7 Creating the watch table of the PLC

To monitor and force the signals, you must create a watch table.

→ Before using the TIA Portal V13 software, read the related Operating Instructions and the Operating Instructions of the PLC.

In TIA Portal V13:

→ In the tab "Devices" of the "Project tree" go to "Watch and force tables ----► Add new watch table": a new watch table is added in the function "Watch and force table".

→ Double click the new watch table: the watch table is opened.

→ To fill in the watch table, copy the name of a parameter and paste it in the field "Name" of the watch table: the other fields of the watch table are filled in automatically.

4.6.8 Transferring the watch table from the PC to the PLC

→ Refer to the related Operating Instructions of the software TIA Portal V13 to compile the watch table and transfer it to the PLC.

4.6.9 Monitoring the variables between the device Type 8619 and the PLC

The watch table created in chapter 4.6.7 permits to monitor the variables on the display of the device Type 8619 and on TIA Portal.

→ Before using the TIA Portal V13 software, read the related Operating Instructions and the Operating Instructions of the PLC.

In TIA Portal V13:

→ Click the icon "Download to the device" and follow the instructions given on the PC and in the Operating Instructions of TIA Portal: the watch table is loaded to the PLC.

→ Click the icon "Go online": if green symbols are displayed in "Devices" of the "Project tree", the process is working correctly.

MAN 1000338748 EN Version: D Status: RL (released | freigegeben) printed: 13.09.2022

✓ The variables of the watch table are now linked between the PLC and the device Type 8619 and can be monitored ("for example pH and PVN1"):

- on the display of the device Type 8619, and
- on TIA Portal V13.

→ To monitor the variables on TIA Portal V13, click the icon "Monitor all" of the watch table.

4.6.10 Forcing the variables between the device Type 8619 and the PLC

The watch table created in chapter 4.6.7 permits to force the variables.

Only PVN variables can be forced.

→ Before using the TIA Portal V13 software, read the related Operating Instructions and the Operating Instructions of the PLC.

In TIA Portal V13:

→ Open the watch table created in chapter 4.6.7.

→ If the system is offline, click the icon "Go online": if green symbols are displayed in "Devices" of the "Project tree", the process is working correctly.

→ Enter the value of the PVN variable in column "Modify value".

→ Click the icon "Modify all selected values once and now": the new values are accepted in the field "Monitor value" and on the display of the device Type 8619.

✓ You can read the modified values of the PVN variables:

- on the TIA Portal V13, and
- on the display of the device Type 8619.

MAN 1000338748 EN Version: D Status: RL (released | freigegeben) printed: 13.09.2022

5 PROFINET

5.1 General information

NOTICE

Wrong installation can damage the process.

- Configuration must only be carried out by qualified and skilled staff with the appropriate knowledge in PROFINET IO.

→ Refer also to the Operating Instructions of the device Type 8619.

The device can use both startup modes of PROFINET IO:

- "Legacy" and
- "Advanced".

To exchange the variables of the device Type 8619, a mapping must be done by an external configuration tool using the GSDml file, available on the internet at: country.burkert.com. See the example chapter 5.3, page 50.

The GSDml file of the device Type 8619 is compatible from PROFINET version V2.0.

For more information, refer to the GSDml file of the device Type 8619.

5.1.1 VLAN priority tagging

With this feature, the device Type 8619 used with PROFINET IO protocol can prioritize frames.

The device Type 8619 supports RT_CLASS1.

→ In your network, use industrial standard switches that support RT_CLASS1.

5.1.2 Media Redundancy Protocol (MRP)

In a ring network topology with one manager (called Media Redundancy Manager or MRM) the device Type 8619 supports the Media Redundancy Protocol (MRP) as a client (MRC).

The device Type 8619 has 2 ports connected to a switch inside the device. The switch supports the MRP.

The device Type 8619 and each port have their own MAC addresses:

- MAC address of the device Type 8619: MAC address marked on the additional marking. (ex.: DC-B0-58-00-00-01)
- MAC address of Port1: MAC address of the device Type 8619 incremented with 1. (ex.: DC-B0-58-00-00-**02**)
- MAC address of Port2: MAC address of the device Type 8619 incremented with 2. (ex.: DC-B0-58-00-00-**03**)

5.1.3 Simple Network Management Protocol (SNMPv1) and Management Information Base (MIB)

The device Type 8619 supports the SNMP which permits the automatic exchange of equipment information in a network.

This information is called Management Information Bases (MIBs) and is hierarchically organised into groups.

MIB can be accessed via commands provided within the SNMP protocol.

MAN 1000338748 EN Version: D Status: RL (released | freigegeben) printed: 13.09.2022

5.1.4 Link Layer Discovery Protocol (LLDP)

The LLDP is a protocol supported by the device Type 8619.

The device Type 8619 multicasts LLDP data packets.

5.1.5 Device naming

In a PROFINET network, the device Type 8619 is identified using its unique "device name" (DNS name).

The default "device name" is "multiCELL" and can be changed:

- either manually in the menu structure of the device,
- or automatically by the IO controller with the DCP protocol.

To enter a valid name for the device Type 8619, you must apply the following rules when using the PROFINET specification V2.3:

1. The device name must not have more than 240 characters. The following characters are permitted:
   - Letters "a" to "z";
   - Numbers "0" to "9";
   - Hyphen "-" or period ".".
2. One name component in the device name – a character string between two periods (".") – may not have more than 63 characters.
3. The device name may not begin or end with a hyphen ("-").
4. The device name may not begin with the character string "port-xyz" (x, y, z = 0...9).
5. The device name may not have the form n.n.n.n (n = 0...9).

5.1.6 Conformance Class (CC-B)

PROFINET components are categorized in 3 conformance classes, depending on their functionalities.

The device Type 8619 has the conformance class B certification.

→ Refer to PI organization (PROFIBUS and PROFINET International) for more details.

5.1.7 Multiple Application Relation (AR)

To exchange data, an application relation (AR) has to be set up between the IO controller and the IO device.

The device Type 8619 can simultaneously process:

- up to 2 IO AR's,
- and 1 supervisor AR.

MAN 1000338748 EN Version: D Status: RL (released | freigegeben) printed: 13.09.2022

5.2 Mapping of the GSDml file for the device Type 8619

The GSDml file is a generic file compatible with all configurations of the device Type 8619. The generic GSDml file must be loaded in the PLC and mapped depending on the configuration of each device Type 8619 (see Fig. 2).

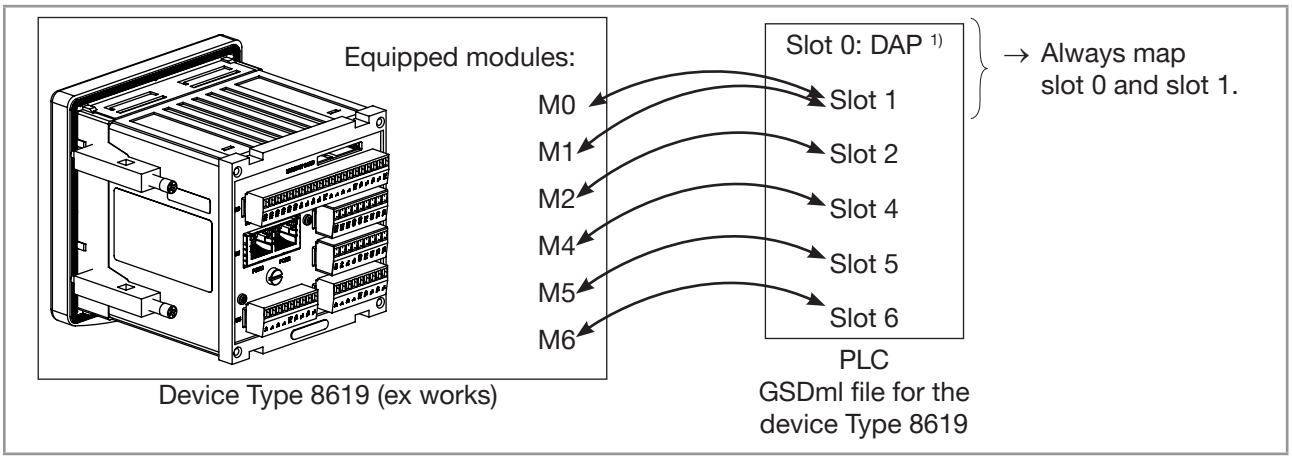

Fig. 2 : Mapping between the GSDml file of the PLC and the device Type 8619

1. The slot 0 with DAP [1] is automatically mapped by creating the device image in the PLC, according to Table 22 and Table 23. For more details, see the example in chapter 5.3, page 50.
2. If needed, map slot 1 with the main board M0 and the extension module M1, according to Table 22 and Table 23.
3. If needed and if the related extension modules are plugged, map slot 2, slot 4, slot 5 and/or slot 6 with the related extension modules according to Table 22 and Table 23.

Table 22: Mapping between the slots of the GSDml file and the device Type 8619

Slot number	Slot 0	Slot 1	Slot 2	Slot 4	Slot 5	Slot 6
Physical module	DAP [1]	M0 + M1 + Functions	M2	M4	M5	M6
Slot ID	100	1000	2000	2000	2000	2000
Size (byte)	-	336	64	64	64	64

Table 23: Slots and subslots structure

Slot number	Subslot number	Subslot name
Slot 0	1	DAP [1]
	8000	Interface (switch)
	8001	PORT 1
	8002	PORT 2
Slot 1	1	M0 inputs/outputs (see Table 24)
	2	Functions (see Table 25)
	3	10 PVNs (see Table 27)
	4	10 PVNs (see Table 27)
Slot 2 Slot 4 Slot 5 Slot 6	1	Name of the extension module, plugged into the related slot (see Table 28 to Table 31)

1) DAP: Device Access Point of the PROFINET device Type 8619

MAN 1000338748 EN Version: D Status: RL (released | freigegeben) printed: 13.09.2022

5.2.1 Variables of the modules

This section describes the variables of the main board M0, the functions, the PVCs and the extension modules and the offset of these variables. For the type (SI), refer to chapter 3.7.

For Table 24 to Table 32, the columns "Acyclic address" are valid for devices equipped with an Ethernet extension module M1 from data version A.02.

→ On the device Type 8619, check the data version in the menu "Information ----► Versions ----► M1: Ethernet ----► Data".

Table 24: Variables of the main board M0

Module	Acyclic address (hex)	Slot	Sub-slot	Byte offset	Variable name	Variable description	Type (SI)	Read/ Write	Unit
Main	0x0101	1	1	0	ID [1]	Identification of the main board	INT	R	-
Main	0x0102	1	1	2	Module Status [2]	Status of the main board	INT	R	-
Main	0x0103	1	1	4	M1-M3 Status [2]	Status of the extension modules	INT	R	-
Main	0x0104	1	1	6	M4-M6 Status [2]	Status of the extension modules	INT	R	-
Main	0x0105	1	1	8	System-Switch [2]	Status of the SystemSwitch	INT	R	-
Main	0x0106	1	1	10	DI1 Status [2]	Status of the digital input 1	INT	R	-
Main	0x0107	1	1	12	DI2 Status [2]	Status of the digital input 2	INT	R	-
Main	0x0108	1	1	14	Reserved	-	INT	R	-
Main	0x0109	1	1	16	DO1	Value of the digital output 1	INT	R	0: OFF 1: ON 2: PWM or FastPWM 3: PFM 4: Pulse
Main	0x010A	1	1	18	DO2	Value of the digital output 2	INT	R	0: OFF 1: ON 2: PWM or FastPWM 3: PFM 4: Pulse
Main	0x010B	1	1	20	AO1	Value of the analog output 1	REAL	R	mA
Main	0x010C	1	1	24	AO2	Value of the analog output 2	REAL	R	mA
Main	0x010D	1	1	28	DI1Frequency	Frequency value of the digital input 1	REAL	R	Hz
Main	0x010E	1	1	32	DI1Flow	Flow value of the digital input 1	REAL	R	L/min

1) Refer to chapter 7.1 to find the identification value (ID) of the main board.

2) Refer to chapter 8.1 to find the status value of the main board.

MAN 1000338748 EN Version: D Status: RL (released | freigegeben) printed: 13.09.2022

Module	Acyclic address (hex)	Slot	Sub-slot	Byte offset	Variable name	Variable description	Type (SI)	Read/ Write	Unit
Main	0x010F	1	1	36	DI1TotA	Value of the totaliser A on the digital input 1	REAL	R	L
Main	0x0110	1	1	40	DI1TotB	Value of the totaliser B on the digital input 1	REAL	R	L
Main	0x0111	1	1	44	DI2Fre-quency	Frequency value of the digital input 2	REAL	R	Hz
Main	0x0112	1	1	48	DI2Flow	Flow value of the digital input 2	REAL	R	L/min
Main	0x0113	1	1	52	DI2TotA	Value of the totaliser A on the digital input 2	REAL	R	L
Main	0x0114	1	1	56	DI2TotB	Value of the totaliser B on the digital input 2	REAL	R	L
Main	0x0115	1	1	60...63	Reserved	-	REAL	R	-

1) Refer to chapter 7.1 to find the identification value (ID) of the main board.

2) Refer to chapter 8.1 to find the status value of the main board.

MAN 1000338748 EN Version: D Status: RL (released | freigegeben) printed: 13.09.2022

Table 25: Variables of the functions of the main board M0

Module	Acyclic address (hex)	Slot	Sub-slot	Byte offset	Function number	Variable name	Variable description	Type (SI)	Read/ Write
Main	0x0201	1	2	0	F1	ID [1]	Identification of the function 1	INT	R
Main	0x0202	1	2	2		Function Status [2]	Status of the function	INT	R
Main	0x0203	1	2	4		Value 1	Depend on the selected function. See chapter 5.2.2.	REAL	R
Main	0x0204	1	2	8		Value 2		REAL	R
Main	0x0205	1	2	12		Value 3		REAL	R
Main	0x0206	1	2	16	F2	ID [1]	Identification of the function 2	INT	R
Main	0x0207	1	2	18		Function Status [2]	Status of the function	INT	R
Main	0x0208	1	2	20		Value 1	Depend on the selected function. See chapter 5.2.2.	REAL	R
Main	0x0209	1	2	24		Value 2		REAL	R
Main	0x020A	1	2	28		Value 3		REAL	R
Main	0x020B	1	2	32	F3	ID [1]	Identification of the function 3	INT	R
Main	0x020C	1	2	34		Function Status [2]	Status of the function	INT	R
Main	0x020D	1	2	36		Value 1	Depend on the selected function. See chapter 5.2.2.	REAL	R
Main	0x020E	1	2	40		Value 2		REAL	R
Main	0x020F	1	2	44		Value 3		REAL	R
Main	0x0210	1	2	48	F4	ID [1]	Identification of the function 4	INT	R
Main	0x0211	1	2	50		Function Status [2]	Status of the function	INT	R
Main	0x0212	1	2	52		Value 1	Depend on the selected function. See chapter 5.2.2.	REAL	R
Main	0x0213	1	2	56		Value 2		REAL	R
Main	0x0214	1	2	60		Value 3		REAL	R
Main	0x0215	1	2	64	F5	ID [1]	Identification of the function 5	INT	R
Main	0x0216	1	2	66		Function Status [2]	Status of the function	INT	R
Main	0x0217	1	2	68		Value 1	Depend on the selected function. See chapter 5.2.2.	REAL	R
Main	0x0218	1	2	72		Value 2		REAL	R
Main	0x0219	1	2	76		Value 3		REAL	R
Main	0x021A	1	2	80	F6	ID [1]	Identification of the function 6	INT	R
Main	0x021B	1	2	82		Function Status [2]	Status of the function	INT	R
Main	0x021C	1	2	84		Value 1	Depend on the selected function. See chapter 5.2.2.	REAL	R
Main	0x021D	1	2	88		Value 2		REAL	R
Main	0x021E	1	2	92		Value 3		REAL	R

1) Refer to chapter 7.2 to find the identification value (ID) of the function.

2) Refer to chapter 8.8...chapter 8.14 to find the status value of the function.

MAN 1000338748 EN Version: D Status: RL (released | freigegeben) printed: 13.09.2022

Module	Acyclic address (hex)	Slot	Sub-slot	Byte offset	Function number	Variable name	Variable description	Type (SI)	Read/ Write
Main	0x021F	1	2	96	F7	ID [1]	Identification of the function 7	INT	R
Main	0x0220	1	2	98		Function Status [2]	Status of the function	INT	R
Main	0x0221	1	2	100		Value 1	Depend on the selected function. See chapter 5.2.2.	REAL	R
Main	0x0222	1	2	104		Value 2		REAL	R
Main	0x0223	1	2	108		Value 3		REAL	R
Main	0x0224	1	2	112	F8	ID [1]	Identification of the function 8	INT	R
Main	0x0225	1	2	114		Function Status [2]	Status of the function	INT	R
Main	0x0226	1	2	116		Value 1	Depend on the selected function. See chapter 5.2.2.	REAL	R
Main	0x0227	1	2	120		Value 2		REAL	R
Main	0x0228	1	2	124		Value 3		REAL	R
Main	0x0229	1	2	128	F9	ID [1]	Identification of the function 9	INT	R
Main	0x022A	1	2	130		Function Status [2]	Status of the function	INT	R
Main	0x022B	1	2	132		Value 1	Depend on the selected function. See chapter 5.2.2.	REAL	R
Main	0x022C	1	2	136		Value 2		REAL	R
Main	0x022D	1	2	140		Value 3		REAL	R
Main	0x022E	1	2	144	F10	ID [1]	Identification of the function 10	INT	R
Main	0x022F	1	2	146		Function Status [2]	Status of the function	INT	R
Main	0x0230	1	2	148		Value 1	Depend on the selected function. See chapter 5.2.2.	REAL	R
Main	0x0231	1	2	152		Value 2		REAL	R
Main	0x0232	1	2	156		Value 3		REAL	R
Main	0x0233	1	2	160	F11	ID [2]	Identification of the function 11	INT	R
Main	0x0234	1	2	162		Function Status [3]	Status of the function	INT	R
Main	0x0235	1	2	164		Value 1	Depend on the selected function. See chapter 5.2.2.	REAL	R
Main	0x0236	1	2	168		Value 2		REAL	R
Main	0x0237	1	2	172		Value 3		REAL	R
Main	0x0238	1	2	176	F12	ID [2]	Identification of the function 12	INT	R
Main	0x0239	1	2	178		Function Status [3]	Status of the function	INT	R
Main	0x023A	1	2	180		Value 1	Depend on the selected function. See chapter 5.2.2.	REAL	R
Main	0x023B	1	2	184		Value 2		REAL	R
Main	0x023C	1	2	188		Value 3		REAL	R

1) Refer to chapter 7.2 to find the identification value (ID) of the function.

2) Refer to chapter 8.8...chapter 8.14 to find the status value of the function.

MAN 1000338748 EN Version: D Status: RL (released | freigegeben) printed: 13.09.2022

The data of Table 26 are valid for devices equipped with an Ethernet extension module M1 from data version A.02.

→ On the device Type 8619, check the data version in the menu "Information ----► Versions ----► M1: Ethernet ----► Data".

Table 26: Variables of the PVCs of the main board M0

Module	Acyclic address (hex)	Slot	Sub-slot	Byte offset	Variable name	Variable description	Type (SI)	Read/ Write	Unit
M0	0x0501	-	-	-	ID [1]	Identification of all the PVC	INT	R	-
M0	0x0502	-	-	-	Constant Status 1	Status of the PVC 1	INT	R	-
M0	0x0503	-	-	-	Constant Value 1	Value of the PVC 1	REAL	R	[3]
M0	0x0504	-	-	-	Constant Status 2	Status of the PVC 2	INT	R	-
M0	0x0505	-	-	-	Constant Value 2	Value of the PVC 2	REAL	R	[3]
M0	0x0506	-	-	-	Constant Status 3	Status of the PVC 3	INT	R	-
M0	0x0507	-	-	-	Constant Value 3	Value of the PVC 3	REAL	R	[3]
M0	0x0508	-	-	-	Constant Status 4	Status of the PVC 4	INT	R	-
M0	0x0509	-	-	-	Constant Value 4	Value of the PVC 4	REAL	R	[3]
M0	0x050A	-	-	-	Constant Status 5	Status of the PVC 5	INT	R	-
M0	0x050B	-	-	-	Constant Value 5	Value of the PVC 5	REAL	R	[3]
M0	0x050C	-	-	-	Constant Status 6	Status of the PVC 6	INT	R	-
M0	0x050D	-	-	-	Constant Value 6	Value of the PVC 6	REAL	R	[3]
M0	0x050E	-	-	-	Constant Status 7	Status of the PVC 7	INT	R	-
M0	0x050F	-	-	-	Constant Value 7	Value of the PVC 7	REAL	R	[3]
M0	0x0510	-	-	-	Constant Status 8	Status of the PVC 8	INT	R	-
M0	0x0511	-	-	-	Constant Value 8	Value of the PVC 8	REAL	R	[3]

1) Refer to chapter 7.3 to find the identification value (ID) of the PVCs.

2) Refer to chapter 8.15 to find the status value of the PVCs.

3) Refer to chapter 9 to find the value of the unit.

MAN 1000338748 EN Version: D Status: RL (released | freigegeben) printed: 13.09.2022

Module	Acyclic address (hex)	Slot	Sub-slot	Byte offset	Variable name	Variable description	Type (SI)	Read/ Write	Unit
M0	0x0512	-	-	-	Constant Status 9	Status of the PVC 9	INT	R	3)
M0	0x0513	-	-	-	Constant Value 9	Value of the PVC 9	REAL	R	3)
M0	0x0514	-	-	-	Constant Status 10	Status of the PVC 10	INT	R	3)
M0	0x0515	-	-	-	Constant Value 10	Value of the PVC 10	REAL	R	3)
M0	0x0516	-	-	-	Constant Status 11	Status of the PVC 11	INT	R	3)
M0	0x0517	-	-	-	Constant Value 11	Value of the PVC 11	REAL	R	3)
M0	0x0518	-	-	-	Constant Status 12	Status of the PVC 12	INT	R	3)
M0	0x0519	-	-	-	Constant Value 12	Value of the PVC 12	REAL	R	3)

1) Refer to chapter 7.3 to find the identification value (ID) of the PVCs.

2) Refer to chapter 8.15 to find the status value of the PVCs.

3) Refer to chapter 9 to find the value of the unit.

MAN 1000338748 EN Version: D Status: RL (released | freigegeben) printed: 13.09.2022

Table 27: Variables of the Ethernet extension module M1 - PVN

Module	Acyclic address (hex)	Slot	Sub-slot	Byte offset	Variable name	Variable description	Type (SI)	Read/ Write	Unit
M1	0x0301	1	3	0	PVN1	Process Value Network 1	REAL	R/W	1)
M1	0x0302	1	3	4	PVN2	Process Value Network 2	REAL	R/W	1)
M1	0x0303	1	3	8	PVN3	Process Value Network 3	REAL	R/W	1)
M1	0x0304	1	3	12	PVN4	Process Value Network 4	REAL	R/W	1)
M1	0x0305	1	3	16	PVN5	Process Value Network 5	REAL	R/W	1)
M1	0x0306	1	3	20	PVN6	Process Value Network 6	REAL	R/W	1)
M1	0x0307	1	3	24	PVN7	Process Value Network 7	REAL	R/W	1)
M1	0x0308	1	3	28	PVN8	Process Value Network 8	REAL	R/W	1)
M1	0x0309	1	3	32	PVN9	Process Value Network 9	REAL	R/W	1)
M1	0x030A	1	3	36	PVN10	Process Value Network 10	REAL	R/W	1)
M1	0x0401	1	4	40	PVN11	Process Value Network 11	REAL	R/W	1)
M1	0x0402	1	4	44	PVN12	Process Value Network 12	REAL	R/W	1)
M1	0x0403	1	4	48	PVN13	Process Value Network 13	REAL	R/W	1)
M1	0x0404	1	4	52	PVN14	Process Value Network 14	REAL	R/W	1)
M1	0x0405	1	4	56	PVN15	Process Value Network 15	REAL	R/W	1)
M1	0x0406	1	4	60	PVN16	Process Value Network 16	REAL	R/W	1)
M1	0x0407	1	4	64	PVN17	Process Value Network 17	REAL	R/W	1)
M1	0x0408	1	4	68	PVN18	Process Value Network 18	REAL	R/W	1)
M1	0x0409	1	4	72	PVN19	Process Value Network 19	REAL	R/W	1)
M1	0x040A	1	4	76	PVN20	Process Value Network 20	REAL	R/W	1)

1) To select the unit of the PVN, refer to the Operating Instructions of the device Type 8619.

MAN 1000338748 EN Version: D Status: RL (released | freigegeben) printed: 13.09.2022

Table 28: Variables of the Input extension module

Module	Acyclic address (hex)	Slot	Sub-slot	Byte offset	Variable name	Variable description	Type (SI)	Read/ Write	Unit
Mx [1]	0xY101 [2]	x [3]	1	0	ID [4]	Identification of the extension module	INT	R	-
Mx [1]	0xY102 [2]	x [3]	1	2	Module Status [5]	Status of the extension module	INT	R	-
Mx [1]	0xY103 [2]	x [3]	1	4	DI1 Status [5]	Status of the digital input 1	INT	R	-
Mx [1]	0xY104 [2]	x [3]	1	6	DI2 Status [5]	Status of the digital input 2	INT	R	-
Mx [1]	0xY105 [2]	x [3]	1	8	AI1 Status [5]	Status of the analog input 1	INT	R	-
Mx [1]	0xY106 [2]	x [3]	1	10	AI2 Status [5]	Status of the analog input 2	INT	R	-
Mx [1]	0xY107 [2]	x [3]	1	12	DI1Fre-quency	Frequency value of the digital input 1	REAL	R	Hz
Mx [1]	0xY108 [2]	x [3]	1	16	DI1Flow	Flow value of the digital input 1	REAL	R	L/min
Mx [1]	0xY109 [2]	x [3]	1	20	DI1TotA	Value of the totaliser A on the digital input 1	REAL	R	L
Mx [1]	0xY10A [2]	x [3]	1	24	DI1TotB	Value of the totaliser B on the digital input 1	REAL	R	L
Mx [1]	0xY10B [2]	x [3]	1	28	DI2Fre-quency	Frequency value of the digital input 2	REAL	R	Hz
Mx [1]	0xY10C [2]	x [3]	1	32	DI2Flow	Flow value of the digital input 2	REAL	R	L/min
Mx [1]	0xY10D [2]	x [3]	1	36	DI2TotA	Value of the totaliser A on the digital input 2	REAL	R	L
Mx [1]	0xY10E [2]	x [3]	1	40	DI2TotB	Value of the totaliser B on the digital input 2	REAL	R	L
Mx [1]	0xY10F [2]	x [3]	1	44	AI1Raw	Analog input 1, current or voltage signal	REAL	R	V
Mx [1]	0xY110 [2]	x [3]	1	48	AI1	Value of the analog input 1	REAL	R	[6]
Mx [1]	0xY111 [2]	x [3]	1	52	AI2Raw	Analog input 2, current or voltage signal	REAL	R	V
Mx [1]	0xY112 [2]	x [3]	1	56	AI2	Value of the analog input 2	REAL	R	[6]
Mx [1]	0xY113 [2]	x [3]	1	60...63	Reserved	-	REAL	R	-

1) Mx: the extension module can be plugged into module M2, M4, M5 or M6.

2) Replace Y by the slot number defined in [3].

3) x=2, 4, 5 or 6, depending on the slot number where the extension module is plugged into. See Table 23.

4) Refer to chapter 7.1 to find the identification value (ID) of the extension module.

5) Refer to chapter 8.4 to find the status value of the Input extension module.

6) Refer to chapter 9 to find the value of the unit.

MAN 1000338748 EN Version: D Status: RL (released | freigegeben) printed: 13.09.2022

Table 29: Variables of the Output extension module

Module	Acyclic address (hex)	Slot	Sub-slot	Byte offset	Variable name	Variable description	Type (SI)	Read/ Write	Unit
Mx [1]	0xY101 [2]	x [3]	1	0	ID [4]	Identification of the extension module	INT	R	-
Mx [1]	0xY102 [2]	x [3]	1	2	Module Status [5]	Status of the extension module	INT	R	-
Mx [1]	0xY103 [2]	x [3]	1	4	Reserved	-	INT	R	-
Mx [1]	0xY104 [2]	x [3]	1	6	DO1	Value of digital output 1	INT	R	0: OFF 1: ON 2: PWM or FastPWM 3: PFM 4: Pulse
Mx [1]	0xY105 [2]	x [3]	1	8	DO2	Value of digital output 2	INT	R	0: OFF 1: ON 2: PWM or FastPWM 3: PFM 4: Pulse
Mx [1]	0xY106 [2]	x [3]	1	10	Reserved	-	INT	R	-
Mx [1]	0xY107 [2]	x [3]	1	12	AO1	Value of analog output 1	REAL	R	mA
Mx [1]	0xY108 [2]	x [3]	1	16	AO2	Value of analog output 2	REAL	R	mA
Mx [1]	0xY109... 0xY113 [2]	x [3]	1	20...63	Reserved	-	REAL	R	-

1) Mx: the extension module can be plugged into slot M2, M4, M5 or M6.

2) Replace Y by the slot number defined in [3].

3) x=2, 4, 5 or 6, depending on the slot number where the extension module is plugged into. See Table 23.

4) Refer to chapter 7.1 to find the identification value (ID) of the extension module.

5) Refer to chapter 8.5 to find the status value of the Output extension module.

MAN 1000338748 EN Version: D Status: RL (released | freigegeben) printed: 13.09.2022

Table 30: Variables of the Conductivity extension module

Module	Acyclic address (hex)	Slot	Sub-slot	Byte offset	Variable name	Variable description	Type (SI)	Read/ Write	Unit
Mx [1]	0xY101 [2]	x [3]	1	0	ID [4]	Identification of the extension module	INT	R	-
Mx [1]	0xY102 [2]	x [3]	1	2	Module Status [5]	Status of the extension module	INT	R	-
Mx [1]	0xY103 [2]	x [3]	1	4	Temp. Status [5]	Status of the temperature	INT	R	-
Mx [1]	0xY104 [2]	x [3]	1	6	Cond. Status [5]	Status of the conductivity	INT	R	-
Mx [1]	0xY105 [2]	x [3]	1	8	Reserved	-	INT	R	-
Mx [1]	0xY106 [2]	x [3]	1	10	Reserved	-	INT	R	-
Mx [1]	0xY107 [2]	x [3]	1	12	RTD	Input resistance of the temperature stage	REAL	R	Ω
Mx [1]	0xY108 [2]	x [3]	1	16	Temper-ature	Temperature value	REAL	R	°C
Mx [1]	0xY109 [2]	x [3]	1	20	Conduc-tivity	Conductivity value	REAL	R	µS/cm
Mx [1]	0xY10A [2]	x [3]	1	24	Resistivity	Resistivity value	REAL	R	Ω.cm
Mx [1]	0xY10B [2]	x [3]	1	28	TDS	Quantity of dis-solved solids	REAL	R	ppm
Mx [1]	0xY10C [2]	x [3]	1	32	Concen-tration	Mass concentration	REAL	R	%
Mx [1]	0xY10D... 0xY113 [2]	x [3]	1	36...63	Reserved	-	REAL	R	-

1) Mx: the extension module can be plugged into slot M2, M4, M5 or M6.

2) Replace Y by the slot number defined in [3].

3) x=2, 4, 5 or 6, depending on the slot number where the extension module is plugged into. See Table 23.

4) Refer to chapter 7.1 to find the identification value (ID) of the extension module.

5) Refer to chapter 8.6 to find the status value of the Conductivity extension module.

MAN 1000338748 EN Version: D Status: RL (released | freigegeben) printed: 13.09.2022

Table 31: Variables of the pH/ORP extension module

Module	Acyclic address (hex)	Slot	Sub-slot	Byte offset	Variable name	Variable description	Type (SI)	Read/ Write	Unit
Mx [1]	0xY101 [2]	x [3]	1	0	ID [4]	Identification of the extension module	INT	R	-
Mx [1]	0xY102 [2]	x [3]	1	2	Module Status [5]	Status of the extension module	INT	R	-
Mx [1]	0xY103 [2]	x [3]	1	4	Temp. Status [5]	Status of the temperature	INT	R	-
Mx [1]	0xY104 [2]	x [3]	1	6	pH/ORP Status [5]	Status of the pH or of the oxidation reduction potential	INT	R	-
Mx [1]	0xY105 [2]	x [3]	1	8	Reserved	-	INT	R	-
Mx [1]	0xY106 [2]	x [3]	1	10	Reserved	-	INT	R	-
Mx [1]	0xY107 [2]	x [3]	1	12	RTD	Input resistance of the temperature stage	REAL	R	Ω
Mx [1]	0xY108 [2]	x [3]	1	16	Temperature	Temperature value	REAL	R	°C
Mx [1]	0xY109 [2]	x [3]	1	20	mV(pH)	pH value in mV	REAL	R	mV
Mx [1]	0xY10A [2]	x [3]	1	24	mV(ORP)	Oxidation reduction potential value in mV	REAL	R	mV
Mx [1]	0xY10B [2]	x [3]	1	28	pH	pH value	REAL	R	pH
Mx [1]	0xY10C [2]	x [3]	1	32	Impedance Glass	Impedance of the glass electrode	REAL	R	Ω
Mx [1]	0xY10D [2]	x [3]	1	36	Impedance Ref	Impedance of the reference electrode	REAL	R	Ω
Mx [1]	0xY10E... 0xY113 [2]	x [3]	1	40...63	Reserved	-	REAL	R	-

Table 32: Variables of an empty slot on the device Type 8619

Module	Acyclic address (hex)	Slot	Sub-slot	Byte offset	Variable name	Variable description	Type (SI)	Read/ Write	Unit
Mx [6]	0xY101 [2]	x [3]	1	0	ID [4]	Identification of the extension module	INT	R	-
Mx [6]	0xY102 [2]	x [3]	1	2	Module Status [5]	Status of the extension module	REAL	R	-
Mx [6]	0xY10E... 0xY113 [2]	x [3]	1	4...63	Reserved	-	REAL	R	-

1) Mx: the extension module can be plugged into slot M2, M4, M5 or M6.

2) Replace Y by the slot number defined in [3].

3) x=2, 4, 5 or 6, depending on the slot number where the extension module is plugged into. See Table 23.

4) Refer to chapter 7.1 to find the identification value (ID) of the extension module.

5) Refer to chapter 8.7 to find the status value of the related extension module.

6) Mx: the empty slots can be slot M2, M3, M4, M5 or M6.

MAN 1000338748 EN Version: D Status: RL (released | freigegeben) printed: 13.09.2022

5.2.2 Variables of the functions

This section describes the variables of the different function types and the offset of these variables.

The variables of a function have a size of 16 bytes. The structure of the variables is the same whatever the function type: refer to Table 33.

The variables of a function depend on the function type. The following function types are available:

- A+B / A-B / A/B / A*B / MATH / PASS / REJECT / DEVIAT, refer to Table 34.
- PROP, refer to Table 35.
- ON/OFF, refer to Table 36.
- PID, refer to Table 37.
- Time dosing, refer to Table 38.
- Volume dosing, refer to Table 39.

For Table 33 to Table 39, the columns "Acyclic address" are valid for devices equipped with an Ethernet extension module M1 from data version A.02.

→ On the device Type 8619, check the data version in the menu "Information ----► Versions ----► M1: Ethernet ----► Data".

Table 33: Structure of the function variables

Module	Acyclic address (hex)	Slot	Sub-slot	Byte offset	Function number	Variable name	Variable description	Type (SI)	Read/ Write	Unit
Main	0x0201+M [1]	1	2	N+0 [2]	Fx [3]	ID [4]	Identification of the function	INT	R	-
Main	0x0202+M [1]	1	2	N+2 [2]	Fx [3]	Function Status [5]	Status of the function	INT	R	-
Main	0x0203+M [1]	1	2	N+4 [2]	Fx [3]	Var1	Value of the variable 1	REAL	R	-
Main	0x0204+M [1]	1	2	N+8 [2]	Fx [3]	Var2	Value of the variable 2	REAL	R	-
Main	0x0205+M [1]	1	2	N+12 [2]	Fx [3]	Var3	Value of the variable 3	REAL	R	-

1) M is calculated as following : (Fx [3] – 1) x 5.
For example, the acyclic address of the Function Status of the function F3 is: 0x0202 + (3 – 1) x 5 = 0x020C

2) N is the offset value given in Table 25.

3) Fx is the function number given in Table 25.

4) Refer to chapter 7.2 to find the identification value (ID) of the function.

5) Refer to chapter 8.8...chapter 8.14 to find the status value of the related function.

MAN 1000338748 EN Version: D Status: RL (released | freigegeben) printed: 13.09.2022

*Table 34: Variables of the functions A+B / A-B / A/B / A*B / MATH / PASS / REJECT / DEVIAT*

Module	Acyclic address (hex)	Slot	Sub-slot	Byte offset	Function number	Variable name	Variable description	Type (SI)	Read/ Write	Unit [5]
Main	0x0201+M [1]	1	2	N+0 [2]	Fx [3]	ID [4]	Identification of the function	INT	R	-
Main	0x0202+M [1]	1	2	N+2 [2]	Fx [3]	Function Status [5]	Status of the function	INT	R	-
Main	0x0203+M [1]	1	2	N+4 [2]	Fx [3]	Result	Result of the function	REAL	R	-
Main	0x0204+M [1]	1	2	N+8 [2]	Fx [3]	Reserved	-	REAL	R	-
Main	0x0205+M [1]	1	2	N+12 [2]	Fx [3]	Reserved	-	REAL	R	-

Table 35: Variables of the function PROP

Module	Acyclic address (hex)	Slot	Sub-slot	Byte offset	Function number	Variable name	Variable description	Type (SI)	Read/ Write	Unit
Main	0x0201+M [1]	1	2	N+0 [2]	Fx [3]	ID [4]	Identification of the function	INT	R	-
Main	0x0202+M [1]	1	2	N+2 [2]	Fx [3]	Function Status [5]	Status of the function	INT	R	-
Main	0x0203+M [1]	1	2	N+4 [2]	Fx [3]	Command	Value of the command	REAL	R	%
Main	0x0204+M [1]	1	2	N+8 [2]	Fx [3]	Reserved	-	REAL	R	-
Main	0x0205+M [1]	1	2	N+12 [2]	Fx [3]	Reserved	-	REAL	R	-

Table 36: Variables of the function ON/OFF

Module	Acyclic address (hex)	Slot	Sub-slot	Byte offset	Function number	Variable name	Variable description	Type (SI)	Read/ Write	Unit
Main	0x0201+M [1]	1	2	N+0 [2]	Fx [3]	ID [4]	Identification of the function	INT	R	-
Main	0x0202+M [1]	1	2	N+2 [2]	Fx [3]	Function Status [5]	Status of the function	INT	R	-
Main	0x0203+M [1]	1	2	N+4 [2]	Fx [3]	Command	Value of the command	REAL	R	%
Main	0x0204+M [1]	1	2	N+8 [2]	Fx [3]	SetPoint	Value of the setpoint	REAL	R	[6]
Main	0x0205+M [1]	1	2	N+12 [2]	Fx [3]	Reserved	-	REAL	R	-

1) M is calculated as following : (Fx [3] – 1) x 5.
For example, the acyclic address of the Function Status of the function F3 is: 0x0202 + (3 – 1) x 5 = 0x020C

2) N is the offset value given in Table 25.

3) Fx is the function number given in Table 25.

4) Refer to chapter 7.2 to find the identification value (ID) of the function.

5) Refer to chapter 8.8...chapter 8.14 to find the status value of the related function.

6) Refer to chapter 9 to find the value of the unit.

MAN 1000338748 EN Version: D Status: RL (released | freigegeben) printed: 13.09.2022

Table 37: Variables of the function PID

Module	Acyclic address (hex)	Slot	Sub-slot	Byte offset	Function number	Variable name	Variable description	Type (SI)	Read/ Write	Unit
Main	0x0201+M [1]	1	2	N+0 [2]	Fx [3]	ID [4]	Identification of the function	INT	R	-
Main	0x0202+M [1]	1	2	N+2 [2]	Fx [3]	Function Status [5]	Status of the function	INT	R	-
Main	0x0203+M [1]	1	2	N+4 [2]	Fx [3]	Command 1	Value of the command 1	REAL	R	%
Main	0x0204+M [1]	1	2	N+8 [2]	Fx [3]	Command 2	Value of the command 2	REAL	R	%
Main	0x0205+M [1]	1	2	N+12 [2]	Fx [3]	SetPoint	Value of the setpoint	REAL	R	[6]

Table 38: Variables of the function Time dosing

Module	Acyclic address (hex)	Slot	Sub-slot	Byte offset	Function number	Variable name	Variable description	Type (SI)	Read/ Write	Unit
Main	0x0201+M [1]	1	2	N+0 [2]	Fx [3]	ID [4]	Identification of the function	INT	R	-
Main	0x0202+M [1]	1	2	N+2 [2]	Fx [3]	Function Status [5]	Status of the function	INT	R	-
Main	0x0203+M [1]	1	2	N+4 [2]	Fx [3]	Command 1	Value of the command 1	REAL	R	%
Main	0x0204+M [1]	1	2	N+8 [2]	Fx [3]	Command 2	Value of the command 2	REAL	R	%
Main	0x0205+M [1]	1	2	N+12 [2]	Fx [3]	Reserved	-	REAL	R	-

Table 39: Variables of the function Volume dosing

Module	Acyclic address (hex)	Slot	Sub-slot	Byte offset	Function number	Variable name	Variable description	Type (SI)	Read/ Write	Unit
Main	0x0201+M [1]	1	2	N+0 [2]	Fx [3]	ID [4]	Identification of the function	INT	R	-
Main	0x0202+M [1]	1	2	N+2 [2]	Fx [3]	Function Status [5]	Status of the function	INT	R	-
Main	0x0203+M [1]	1	2	N+4 [2]	Fx [3]	Command	Value of the command	REAL	R	%
Main	0x0204+M [1]	1	2	N+8 [2]	Fx [3]	SetPoint	Value of the setpoint	REAL	R	[6]
Main	0x0205+M [1]	1	2	N+12 [2]	Fx [3]	Volume	Value of the total volume metered	REAL	R	[6]

1) M is calculated as following : (Fx [3] – 1) x 5.
For example, the acyclic address of the Function Status of the function F3 is: 0x0202 + (3 – 1) x 5 = 0x020C

2) N is the offset value given in Table 25.

3) Fx is the function number given in Table 25.

4) Refer to chapter 7.2 to find the identification value (ID) of the function.

5) Refer to chapter 8.8...chapter 8.14 to find the status value of the related function.

6) Refer to chapter 9 to find the value of the unit.

MAN 1000338748 EN Version: D Status: RL (released | freigegeben) printed: 13.09.2022

5.3 Example of communication between the device Type 8619 and a PLC Type Siemens S7-1200

NOTICE

Wrong installation can damage the process.

- Configuration must only be carried out by qualified and skilled staff with the appropriate knowledge in PROFINET IO.

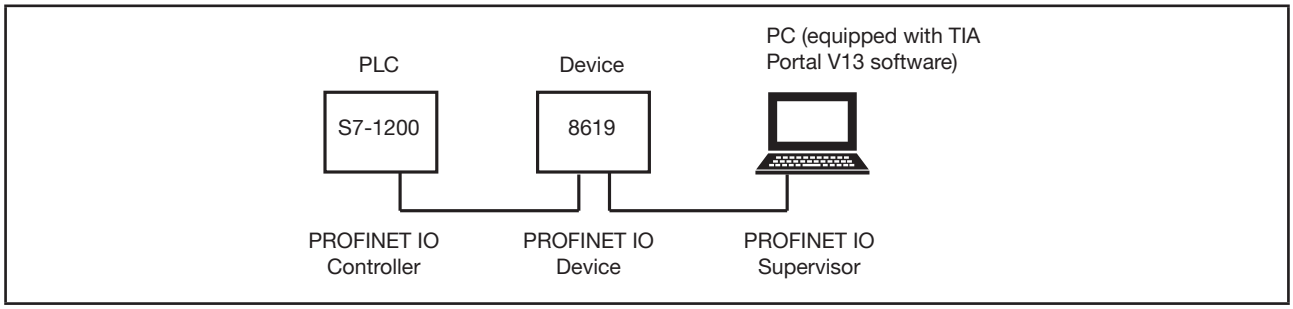

Fig. 3 : Example of open daisy chain network for the PROFINET protocol.

The device has the following hardware configuration:

- a main board M0,
- an Ethernet extension module M1,
- 4 extension modules: Conductivity module in slot M2, pH/ORP module in slot M4, Output module in slot M5 and Input module in slot M6.

To exchange data between the device Type 8619 and the PLC over the PROFINET network, do the following steps:

1. Do the settings related to PROFINET on the device Type 8619 (see chapter 5.3.1).
2. Check the communication between the device and the PC (see chapter 5.3.2).

On the PC connected to the network:

3. Connect the device and the PLC virtually to the network (see chapter 5.3.3).
4. Create the image of the device configuration in the TIA Portal V13 software (see chapter 5.3.4).
5. Create the tag table of the PLC (see chapter 5.3.5).
6. Create the watch table of the PLC (see chapter 5.3.6).
7. Transfer the hardware and software configuration from the PC to the PLC (see chapter 5.3.7).
8. Monitor the variables between the device Type 8619 and the PLC (see chapter 5.3.8).
9. Force the variables between the device Type 8619 and the PLC (see chapter 5.3.9).

MAN 1000338748 EN Version: D Status: RL (released | freigegeben) printed: 13.09.2022

5.3.1 Doing the settings on the device Type 8619

1. Select the protocol used:

→ Go to "Menu ----► Parameters ----► M1:Ethernet ----► Protocol".

→ Select “PROFINET”.

2. Set the device name:

To automatically give a name to the device, activate the mode "DCP"
→ Refer to the Operating Instructions of the device Type 8619.

→ Change the name if more than 1 device Type 8619 is connected to the network. Each device Type 8619 must have a different name.

→ Go to "Menu ----► Parameters ----► M1:Ethernet ----► Device name".

→ Enter the name of the device Type 8619 (default name is "multiCELL"). Observe the rules for the device naming given in chapter 5.1.5, page 34.

3. Set the IP address of the device. To manually set the IP address:

→ Go to "Menu ----► Parameters ----► M1:Ethernet ----► IP settings ----► Mode ----► Manual".

→ Go to "Menu ----► Parameters ----► M1:Ethernet ----► IP settings ----► IP address".

→ Enter the IP address (default value is 0.0.0.0).

4. Set the Netmask of the device:

→ Go to "Menu ----► Parameters ----► M1:Ethernet ----► IP settings ----► Netmask".

→ Enter the Netmask (default value is 0.0.0.0).

5. Set the Gateway address of the device:

→ Go to "Menu ----► Parameters ----► M1:Ethernet ----► IP settings ----► Gateway"

→ Enter the Gateway address (default value is 0.0.0.0)

6. If necessary, select the unit of the process values network PVN:

→ Refer to the Operating Instructions of the device Type 8619.

✔ The settings related to the PROFINET protocol are completed on the device.

→ To validate the settings, restart the device.

5.3.2 Checking the communication between the device and the PC

→ Use a PC to send a ping to the device with the configured IP address.

✔ If the device answers, the device is ready to communicate with the PLC.

MAN 1000338748 EN Version: D Status: RL (released | freigegeben) printed: 13.09.2022

5.3.3 Connecting the device and the PLC virtually to the network

The following procedure uses the software "TIA Portal V13" installed on the PC. The software TIA Portal is used to configure the PLC Siemens S7-1200 and the other IO devices of the network.

→ Before using the TIA Portal V13 software, read the related Operating Instructions and the Operating Instructions of the PLC.

→ Start the software TIA Portal V13.

→ Make sure the network settings (name, IP address,...) have been done for the PLC.

→ Download the GSDml file of the device on the PC. The GSDml file is available at: country.burkert.com.

→ Install the GSDml file on the PC with the TIA Portal V13 software.

In TIA Portal V13:

→ In tab "Devices" of the "Project tree", double click on “Devices & networks”: the "network view" with the image of the PLC is displayed.

→ Open the "Hardware catalog" and search for the device "multiCELL" in the menu tree "Other field devices ----► PROFINET IO ----► I/O ----► buerkert fluid control systems ----► 8619".

→ Drag and drop the icon of the device Type 8619 from the "Hardware catalog" into the "network view".

→ In the properties of the device, enter both the device name and the IP address as set in chapter 5.3.1.

→ Assign the port of the PLC to the port of the device.

✔ The device and the PLC are now both parts of the network.

5.3.4 Creating the image of the device configuration in the TIA Portal software

The configuration image of the device includes the following real configuration elements:

- the physical inputs, the physical outputs and the functions of the main board M0 (steps 1 and 2)
- the Ethernet extension module M1 (step 3),
- the extension modules that are really used (step 4).

!
- All the signals (I/O of the device Type 8619) going from the device Type 8619 to the PLC are considered as inputs by the PLC.
- All the signals (PVN's) going from the PLC to the device Type 8619 are considered as outputs by the PLC.

→ In the tab "Devices" of the "Project tree", double click on “Devices & networks”.

→ Double click on the device icon: the "device view" is displayed.

To create the main board and the Ethernet extension module:

→ Open the "Hardware catalog" and search for "Main and Ethernet modules" in the menu tree "catalog ----► Filter ----► module ----► Input/Output module".

→ Drag and drop the "Main and Ethernet modules" to the slot 1.

MAN 1000338748 EN Version: D Status: RL (released | freigegeben) printed: 13.09.2022

1. To create the image of the physical inputs and physical outputs of the main board M0:

→ Open the "Hardware catalog".

→ Go to " Catalog ----► Filter ----► Submodules ----► Main board".

→ Drag and drop the "Main IO" to the slot 1 and subslot 1 named "1 M0 I/O".

2. To create the image of the active functions of the main board M0:

→ Open the "Hardware catalog".

→ Go to "Catalog ----► Filter ----► Submodules ----► Functions".

→ Drag and drop the "Functions" to the slot 1 and subslot 2 named "1 all functions".

3. To create the image of the extension module "M1: Ethernet":

→ Open the "Hardware catalog".

→ Go to "Catalog ----► Filter ----► Module ----► Output Module".

→ Drag and drop the "Ethernet module for 10PVN Outputs" once to the slot 1 and subslot 3 named "1 PVN 1 to 10" and a second time to the slot 1 and subslot 4 named "1 PVN 11 to 20".

4. To create the image of the other extension modules:

→ Open the "Hardware catalog".

→ Go to "Catalog ----► Filter ----► Module ----► Input Module".

→ Drag and drop the selected extension modules to the related slot ("2", "4", "5" or "6"), while observing the physical configuration of the device.

✔ The image of the device configuration is created in the TIA Portal software.

5.3.5 Creating the tag table of the PLC

The tag table permits the PLC to access the variables of the device Type 8619.

In TIA Portal V13:

→ In the tab "Devices" of the "Project tree", select the PLC used.

→ Go to "PLC tags ----► Add new tag table": a new tag table is added to the function "PLC tags".

→ Double click the new tag table: the tag table is opened.

→ Fill in the fields of the tag table:

- "Name" of the variable (examples of variable names are given in Table 24...Table 31, but you can choose customized names).
- "Data type" with the type (SI) given in Table 24...Table 31.
- "Address" is partly filled in automatically. You must only enter the address number. Refer to the following example.

MAN 1000338748 EN Version: D Status: RL (released | freigegeben) printed: 13.09.2022

How to calculate the address number (example):

For example, tagging a pH-measurement value in pH units.

The signal comes from a pH/ORP extension module plugged into slot M4. The addresses reserved by the PLC for the pH-module are [388...451] (refer to the device overview on TIA Portal).

To calculate the address number, use:

- the beginning of the range of the pH-module in the PLC, i.e. [388],
- the total number of bytes assigned to the variables preceeding the desidered one (i.e. the pH variable number in pH units comes at the 11th position, column "Variable number" in Table 31, and the preceeding 10 variables are sent with 28 bytes, column "Offset" of Table 31),
- The address number is 388 + 28 = 416.

✔ The tag table is created.

5.3.6 Creating the watch table of the PLC

To monitor and force the signals, you must create a watch table.

→ Before using the TIA Portal V13 software, read the related Operating Instructions and the Operating Instructions of the PLC.

In TIA Portal V13:

→ In the tab "Devices" of the "Project tree" go to "Watch and force tables ----► Add new watch table": a new watch table is added to the function "Watch and force table".

→ Double click the new watch table: the watch table is opened.

→ To fill in the watch table, go to the tag table created in chapter 5.3.5, copy the name of a variable and paste it into the field "Name" of the watch table. Click ENTER to validate: the other fields of the watch table are filled in automatically.

✔ The watch table is created.

5.3.7 Transferring the hardware and software configuration from the PC to the PLC

→ Refer to the related Operating Instructions of the software TIA Portal V13 to compile the configuration and transfer it to the PLC.

✔ The image of the device configuration is now created in the PLC.

MAN 1000338748 EN Version: D Status: RL (released | freigegeben) printed: 13.09.2022

5.3.8 Monitoring the variables between the device Type 8619 and the PLC

The watch table created in chapter 5.3.6 permits to monitor the signals/variables.

→ Before using the TIA Portal V13 software, read the related Operating Instructions and the Operating Instructions of the PLC.

In TIA Portal V13:

→ Click the icon "Download to the device" and follow the instructions given on the PC and in the Operating Instructions of TIA Portal: the watch table is loaded to the PLC.

→ Click the icon "Go online": if green symbols are displayed in "Devices" of the "Project tree", the process is working correctly.

✔ The variables of the watch table are now linked between the PLC and the device and can be monitored:

- on the screen of the device Type 8619, and
- on the TIA Portal V13:

→ To monitor the variables on TIA Portal V13, click the icon "Monitor all" of the watch table.

5.3.9 Forcing the variables between the device Type 8619 and the PLC

The watch table created in chapter 5.3.6 permits to force the variables.

Only PVN variables can be forced.

→ Before using the TIA Portal V13 software, read the related Operating Instructions and the Operating Instructions of the PLC.

In TIA Portal V13:

→ Open the created watch table.

→ If the system is offline, click the icon "Go online": if green symbols are displayed in "Devices" of the "Project tree", the process is working correctly.

→ Enter the value of the PVN variable in column "Modify value".

→ Click the icon "Modify all selected values once and now": the new values are accepted in the field "Monitor value" and on the display of the device Type 8619.

✔ You can read the modified values of the PVN variables:

- on the TIA Portal V13, and
- on the display of the device Type 8619 (Refer to the Operating Instructions of the device Type 8619).

MAN 1000338748 EN Version: D Status: RL (released | freigegeben) printed: 13.09.2022

6 ETHERNET/IP

NOTICE

Wrong installation can damage the process.

- Configuration must only be carried out by qualified and skilled staff with the appropriate knowledge in EtherNet/IP.

→ Refer also to the Operating Instructions of the device Type 8619.

6.1 General information

The EtherNet/IP uses:

- a Client/Server access method for explicit messages (for example messages concerning alarms, configuration, reset, read identity information of an equipment). In this case, the device Type 8619 is a server.
- a Scanner/Adapter access method for implicit (I/O) messages (for example messages concerning real time data, cyclic data or measurement data). In this case, the device Type 8619 is an adapter.

→ Refer also to the Operating Instructions of the device Type 8619.

6.1.1 Address Conflict Detection (ACD)

The device Type 8619 can detect the IP addresses of other devices Type 8619 in a network.

If 2 devices Type 8619 in the network have the same IP address, both devices generate an explicit message (alarm).

6.1.2 Dynamic Host Configuration Protocol (DHCP)

The device Type 8619 permits to use the Dynamic Host Configuration Protocol (DHCP).

DHCP detects the MAC addresses of the different pieces of equipment of a network and automatically attributes an IP address to each piece of equipment.

→ To activate the DHCP protocol, refer to the Operating Instructions of the device Type 8619.

6.1.3 Bootstrap Protocol (BOOTP)

The device Type 8619 permits to use the Bootstrap Protocol.

BOOTP detects the MAC addresses of the different pieces of equipment of a network and requires the user to enter an IP address for each piece of equipment.

→ To activate the BOOTP protocol, refer to the Operating Instructions of the device Type 8619.

MAN 1000338748 EN Version: D Status: RL (released | freigegeben) printed: 13.09.2022

6.1.4 Reset service of the Identity object

The reset service of the Identity object is a request sent on the network by the host application which manages the network. The device Type 8619 can respond to this request using the following reset types:

- For a reset type 0: performs a restart of the device (the Ethernet configuration set by the user is preserved).
- For a reset type 1: performs a restart of the device and restores the factory settings of the Ethernet configuration of the device.

→ To perform the reset service, refer to Table 61 in chapter 6.4.1.

6.1.5 Connection timeout

The connection timeout is the time during which the PLC does not receive any answer from the device Type 8619. If this occurs, the connection is disconnected by the PLC.

The connection timeout is a multiple of the RPI time (see definition of the RPI time in chapter 3.5).

Connection timeout (ms)= K x RPI time

RPI time default value is 100 ms.

6.2 EtherNet/IP object classes available for the device Type 8619

The device Type 8619 supports different CIP (common industrial protocol) object classes and can handle the following messages:

- implicit (I/O) messages given in Table 40 and in chapter 6.3.
- explicit messages described in chapter 6.4.

Table 40: Object classes supported by the device Type 8619 for implicit messages

Class code (dec)	Class code (hex)	Object class	Description	Detailed data structure
4	0x04	I/O assembly object	Binds attributes of multiple objects. Object data can be sent or received via a single connection.	See chapter 6.3

For more details about the object classes, refer to the EtherNet/IP standard objects, available on the ODVA website.

MAN 1000338748 EN Version: D Status: RL (released | freigegeben) printed: 13.09.2022

6.3 I/O assembly instances for implicit messages or cyclic data (class code 0x04)

Table 41 identifies the I/O assembly instances supported by the device.

Table 41: I/O assembly instances of the device Type 8619 for implicit (I/O) messages

Class code	Assembly instance					Access rule	Description	Detailed data structure
	Number		Name	Type	Size (bytes)			
	(dec)	(hex)						
0x04 (4)$_{dec}$	100	0x64	Main_Input_ Functions	Input	256	Read	Variables of the main board and variables of the functions	Chapter 6.3.2
	101	0x65	Network_ Output	Output	80	Write	PVNs of the Ethernet extension module M1	Chapter 6.3.3
	102	0x66	All_Slots	Input	384	Read	Variables of the extension modules M1...M6	Chapter 6.3.4
	193	0xC1	-	Output	0	-	Only for an application type "Input only" (see chapter 6.3.1)	-

6.3.1 EtherNet/IP device I/O connections

A device I/O connection is a collection of different assembly instructions (implicit messages) which contains the variables that the user needs. Table 42 shows the 3 I/O connection types.

The I/O connections are also described in the ESD file.

Table 42: Device I/O connections

I/O Connection type	I/O Connection name	Application type	Description	Transport class	O->T connection parameters	T->O connection parameters	Affected assemblies
Connection 1	ExOwner_ Main_Functions_M1	Exclusive owner	All physical inputs/outputs of the main board, with functions and the outputs PVNs	Class 1: duplicate detect	Point2Point scheduled	Point2Point scheduled multicast	Assembly 100 and assembly 101
Connection 2	InputOnly_ main_Functions	Input only	All physical inputs/outputs of the main board, with functions	Class 1: duplicate detect	Point2Point scheduled	Point2Point scheduled multicast	Assembly 100
Connection 3	InputOnly_All_ Extension_ Modules	Input only	All physical inputs/outputs of the extension modules	Class 1: duplicate detect	Point2Point scheduled	Point2Point scheduled multicast	Assembly 102

The number of I/O connections is limited to 5.

The minimum RPI connection time is 100 ms and the maximum RPI connection time is 1000 ms.

MAN 1000338748 EN Version: D Status: RL (released | freigegeben) printed: 13.09.2022

6.3.2 I/O assembly instance 100 (0x64) data format

Table 43 describes the variables of the main board for the I/O assembly instance 100 (0x64).

Table 44 describes the general structure of the function variables for the I/O assembly instance 100 (0x64). The variables depend on the function type. The following function types are available:

- A+B, A-B, A/B, A*B, MATH, PASS, REJECT or DEVIAT, refer to Table 45.
- PROP, refer to Table 46.
- ON/OFF, refer to Table 47.
- PID, refer to Table 48.
- Time dosing, refer to Table 49.
- Volume dosing, refer to Table 50.

MAN 1000338748 EN Version: D Status: RL (released | freigegeben) printed: 13.09.2022

Table 43: I/O assembly instance 100 (0x64) – Variables of the main board M0

Variable no.	Address (dec)	Address (hex)	Variable name	Variable description	Data type	Unit
1	0	0	ID [1]	Identification of the main board	INT	-
2	2	2	Module Status [2]	Status of the main board	INT	-
3	4	4	M1-M3 Status [2]	Status of the extension modules	INT	-
4	6	6	M4-M6 Status [2]	Status of the extension modules	INT	-
5	8	8	SystemSwitch [2]	Status of the SystemSwitch	INT	-
6	10	A	DI1 Status [2]	Status of the digital input 1	INT	-
7	12	C	DI2 Status [2]	Status of the digital input 2	INT	-
8	14	E	Reserved	-	INT	-
9	16	10	DO1	Value of the digital output 1	INT	0: OFF (default) 1: ON 2: PWM or FastPWM 3: PFM 4: Pulse
9	18	12	DO2	Value of the digital output 2	INT	0: OFF (default) 1: ON 2: PWM or FastPWM 3: PFM 4: Pulse
10	20	14	AO1	Value of the analog output 1	REAL	mA
11	24	18	AO2	Value of the analog output 2	REAL	mA
12	28	1C	DI1Frequency	Frequency value of the digital input 1	REAL	Hz
13	32	20	DI1Flow	Flow value of the digital input 1	REAL	L/min
14	36	24	DI1TotA	Value of the totaliser A on the digital input 1	REAL	L
15	40	28	DI1TotB	Value of the totaliser B on the digital input 1	REAL	L
16	44	2C	DI2Frequency	Frequency value of the digital input 2	REAL	Hz
17	48	30	DI2Flow	Flow value of the digital input 2	REAL	L/min
18	52	34	DI2TotA	Value of the totaliser A on the digital input 2	REAL	L
19	56	38	DI2TotB	Value of the totaliser B on the digital input 2	REAL	L
20	60	3C	Reserved	-	REAL	-

1) Refer to chapter 7.1 to find the identification value (ID) of the main board.

2) Refer to chapter 8.1 to find the status value of the main board.

MAN 1000338748 EN Version: D Status: RL (released | freigegeben) printed: 13.09.2022

Table 44: I/O assembly instance 100 (0x64) – Variables of the functions – General structure

Variable no.	Address (dec)	Address (hex)	Function number	Variable name	Variable description	Data type
21	64	40	F1	ID [1]	Identification of the function 2	INT
22	66	42		Function Status [2]	Status of the function	INT
23	68	44		Value 1	Depend on the selected function. See Table 45 to Table 50.	REAL
24	72	48		Value 2		REAL
25	76	4C		Value 3		REAL
26	80	50	F2	ID [1]	Identification of the function 2	INT
27	82	52		Function Status [2]	Status of the function	INT
28	84	54		Value 1	Depend on the selected function. See Table 45 to Table 50.	REAL
29	88	58		Value 2		REAL
30	92	5C		Value 3		REAL
31	96	60	F3	ID [1]	Identification of the function 3	INT
32	98	62		Function Status [2]	Status of the function	INT
33	100	64		Value 1	Depend on the selected function. See Table 45 to Table 50.	REAL
34	104	68		Value 2		REAL
35	108	6C		Value 3		REAL
36	112	70	F4	ID [1]	Identification of the function 4	INT
37	114	72		Function Status [2]	Status of the function	INT
38	116	74		Value 1	Depend on the selected function. See Table 45 to Table 50.	REAL
39	120	78		Value 2		REAL
40	124	7C		Value 3		REAL
41	128	80	F5	ID [1]	Identification of the function 5	INT
42	130	82		Function Status [2]	Status of the function	INT
43	132	84		Value 1	Depend on the selected function. See Table 45 to Table 50.	REAL
44	136	88		Value 2		REAL
45	140	8C		Value 3		REAL
46	144	90	F6	ID [1]	Identification of the function 6	INT
47	146	92		Function Status [2]	Status of the function	INT
48	148	94		Value 1	Depend on the selected function. See Table 45 to Table 50.	REAL
49	152	98		Value 2		REAL
50	156	9C		Value 3		REAL

1) Refer to chapter 7.2 to find the identification value (ID) of the function.

2) Refer to chapter 8.8...chapter 8.14 to find the status value of the function.

MAN 1000338748 EN Version: D Status: RL (released | freigegeben) printed: 13.09.2022

Variable no.	Address (dec)	Address (hex)	Function number	Variable name	Variable description	Data type
51	160	A0	F7	ID [1]	Identification of the function 7	INT
52	162	A2		Function Status [2]	Status of the function	INT
53	164	A4		Value 1	Depend on the selected function. See Table 45 to Table 50.	REAL
54	168	A8		Value 2		REAL
55	172	AC		Value 3		REAL
56	176	B0	F8	ID [1]	Identification of the function 8	INT
57	178	B2		Function Status [2]	Status of the function	INT
58	180	B4		Value 1	Depend on the selected function. See Table 45 to Table 50.	REAL
59	184	B8		Value 2		REAL
60	188	BC		Value 3		REAL
61	192	C0	F9	ID [1]	Identification of the function 9	INT
62	194	C2		Function Status [2]	Status of the function	INT
63	196	C4		Value 1	Depend on the selected function. See Table 45 to Table 50.	REAL
64	200	C8		Value 2		REAL
65	204	CC		Value 3		REAL
66	208	D0	F10	ID [1]	Identification of the function 10	INT
67	210	D2		Function Status [2]	Status of the function	INT
68	212	D4		Value 1	Depend on the selected function. See Table 45 to Table 50.	REAL
69	216	D8		Value 2		REAL
70	220	DC		Value 3		REAL
71	224	E0	F11	ID [1]	Identification of the function 11	INT
72	226	E2		Function Status [2]	Status of the function	INT
73	228	E4		Value 1	Depend on the selected function. See Table 45 to Table 50.	REAL
74	232	E8		Value 2		REAL
75	236	EC		Value 3		REAL
76	240	F0	F12	ID [1]	Identification of the function 12	INT
77	242	F2		Function Status [2]	Status of the function	INT
78	244	F4		Value 1	Depend on the selected function. See Table 45 to Table 50.	REAL
79	248	F8		Value 2		REAL
80	252	FC		Value 3		REAL

1) Refer to chapter 7.2 to find the identification value (ID) of the function.

2) Refer to chapter 8.8...chapter 8.14 to find the status value of the function.

MAN 1000338748 EN Version: D Status: RL (released | freigegeben) printed: 13.09.2022

*Table 45: I/O assembly instance 100 (0x64) – Variables of the functions A+B / A-B / A/B / A*B / MATH / PASS / REJECT / DEVIAT*

Variable no.	Address	Function number	Variable name	Variable description	Data type	Data size (byte)	Unit
N+1 [1]	N+0 [1]	Fx [2]	ID [3]	Identification of the function	INT	2	-
N+2 [1]	N+2 [1]		Function Status [4]	Status of the function	INT	2	-
N+3 [1]	N+4 [1]		Result	Result of the function	REAL	4	[5]
N+4 [1]	N+8 [1]		Reserved	-	REAL	4	-
N+5 [1]	N+12 [1]		Reserved	-	REAL	4	-

Table 46: I/O assembly instance 100 (0x64) – Variables of the function PROP

Variable no.	Address	Function number	Variable name	Variable description	Data type	Data size (byte)	Unit
N+1 [1]	N+0 [1]	Fx [2]	ID [3]	Identification of the function	INT	2	-
N+2 [1]	N+2 [1]		Function Status [4]	Status of the function	INT	2	-
N+3 [1]	N+4 [1]		Command	Value of the command	REAL	4	%
N+4 [1]	N+8 [1]		Reserved	-	REAL	4	-
N+5 [1]	N+12 [1]		Reserved	-	REAL	4	-

Table 47: I/O assembly instance 100 (0x64) – Variables of the function ON/OFF

Variable no.	Address	Function number	Variable name	Variable description	Data type	Data size (byte)	Unit
N+1 [1]	N+0 [1]	Fx [2]	ID [3]	Identification of the function	INT	2	-
N+2 [1]	N+2 [1]		Function Status [4]	Status of the function	INT	2	-
N+3 [1]	N+4 [1]		Command	Value of the command	REAL	4	%
N+4 [1]	N+8 [1]		SetPoint	Value of the setpoint	REAL	4	[5]
N+5 [1]	N+12 [1]		Reserved	-	REAL	4	-

1) N is the start address of the function and depends on the function number. Refer to Table 44.

2) Fx is the function number (F1 to F12).

3) Refer to chapter 7.2 to find the identification value (ID) of the function.

4) Refer to chapter 8.8...chapter 8.14 to find the status value of the function.

5) Refer to chapter 9 to find the value of the unit.

MAN 1000338748 EN Version: D Status: RL (released | freigegeben) printed: 13.09.2022

Table 48: I/O assembly instance 100 (0x64) – Variables of the function PID

Variable no.	Address	Function number	Variable name	Variable description	Data type	Data size (byte)	Unit
N+1 [1]	N+0 [1]	Fx [2]	ID [3]	Identification of the function	INT	2	-
N+2 [1]	N+2 [1]		Function Status [4]	Status of the function	INT	2	-
N+3 [1]	N+4 [1]		Command 1	Command of the channel 1	REAL	4	%
N+4 [1]	N+8 [1]		Command 2	Command of the channel 2	REAL	4	%
N+5 [1]	N+12 [1]		SetPoint 1	Setpoint of the channel 1	REAL	4	[5]

Table 49: I/O assembly instance 100 (0x64) – Variables of the function Time Dosing

Variable no.	Address	Function number	Variable name	Variable description	Data type	Data size (byte)	Unit
N+1 [1]	N+0 [1]	Fx [2]	ID [3]	Identification of the function	INT	2	-
N+2 [1]	N+2 [1]		Function Status [4]	Status of the function	INT	2	-
N+3 [1]	N+4 [1]		Command 1	Command of the channel 1	REAL	4	%
N+4 [1]	N+8 [1]		Command 2	Command of the channel 2	REAL	4	%
N+5 [1]	N+12 [1]		Reserved	-	REAL	4	-

Table 50: I/O assembly instance 100 (0x64) – Variables of the function Volume Dosing

Variable no.	Address	Function number	Variable name	Variable description	Data type	Data size (byte)	Unit
N+1 [1]	N+0 [1]	Fx [2]	ID [3]	Identification of the function	INT	2	-
N+2 [1]	N+2 [1]		Function Status [4]	Status of the function	INT	2	-
N+3 [1]	N+4 [1]		Command	Value of the command	REAL	4	%
N+4 [1]	N+8 [1]		SetPoint	Value of the setpoint	REAL	4	[5]
N+5 [1]	N+12 [1]		Volume	Value of the total volume metered	REAL	4	[5]

1) N is the start address of the function and depends on the function number. Refer to Table 44.

2) Fx is the function number (F1 to F12).

3) Refer to chapter 7.2 to find the identification value (ID) of the function.

4) Refer to chapter 8.8...chapter 8.14 to find the status value of the function.

5) Refer to chapter 9 to find the value of the unit.

MAN 1000338748 EN Version: D Status: RL (released | freigegeben) printed: 13.09.2022

6.3.3 I/O assembly instance 101 (0x65) data format

Table 51 describes the variables (PVNs) of the Ethernet extension module M1 for the I/O assembly instance 101 (0x65).

Table 51: I/O assembly instance 101 (0x65) – Variables of the Ethernet extension module M1

Variable no.	Address		Variable name	Variable description	Data type	Unit
	dec	hex				
1	0	0	PVN1	Process Value Network 1	REAL	1)
2	4	4	PVN2	Process Value Network 2	REAL	1)
3	8	8	PVN3	Process Value Network 3	REAL	1)
4	12	C	PVN4	Process Value Network 4	REAL	1)
5	16	10	PVN5	Process Value Network 5	REAL	1)
6	20	14	PVN6	Process Value Network 6	REAL	1)
7	24	18	PVN7	Process Value Network 7	REAL	1)
8	28	1C	PVN8	Process Value Network 8	REAL	1)
9	32	20	PVN9	Process Value Network 9	REAL	1)
10	36	24	PVN10	Process Value Network 10	REAL	1)
11	40	28	PVN11	Process Value Network 11	REAL	1)
12	44	2C	PVN12	Process Value Network 12	REAL	1)
13	48	30	PVN13	Process Value Network 13	REAL	1)
14	52	34	PVN14	Process Value Network 14	REAL	1)
15	56	38	PVN15	Process Value Network 15	REAL	1)
16	60	3C	PVN16	Process Value Network 16	REAL	1)
17	64	40	PVN17	Process Value Network 17	REAL	1)
18	68	44	PVN18	Process Value Network 18	REAL	1)
19	72	48	PVN19	Process Value Network 19	REAL	1)
20	76	4C	PVN20	Process Value Network 20	REAL	1)

1) To select the unit of the PVN, refer to the Operating Instructions of the device Type 8619

MAN 1000338748 EN Version: D Status: RL (released | freigegeben) printed: 13.09.2022

6.3.4 I/O assembly instance 102 (0x66) data format

Table 52 shows the variable numbers and the offsets of the extension modules, depending on the slot number the extension module is plugged into and for the assembly instance 102 (0x66).

The Ethernet extension module is always plugged into slot M1. Table 53 describes the variables of the Ethernet extension module.

The slot M3 is empty. Table 54 describes the variables of the "None" extension module.

The slots M2, M4, M5 and M6 can have one of the following extension modules:

- Input (variables described in Table 55).
- Output (variables described in Table 56).
- Conductivity (variables described in Table 57).
- pH/ORP (variables described in Table 58).
- None (empty, described in Table 54).

Table 52: I/O assembly instance 102 (0x66) – Extension modules – General structure

Module slot	Type of the extension module	Variable no. (dec)	Start address		Detailed data structure
			(dec)	(hex)	
M1	Ethernet	1...19	0	0	See Table 53
M2	• Input • Output • Conductivity • pH/ORP • None	20...38	64	40	See Table 54 to Table 58
M3	None	39...57	128	80	See Table 54
M4	• Input • Output • Conductivity • pH/ORP • None	58...76	192	C0	See Table 55 to Table 58
M5	• Input • Output • Conductivity • pH/ORP • None	77...95	256	100	See Table 55 to Table 58
M6	• Input • Output • Conductivity • pH/ORP • None	96...114	320	140	See Table 55 to Table 58

MAN 1000338748 EN Version: D Status: RL (released | freigegeben) printed: 13.09.2022

Table 53: I/O assembly instance 102 (0x66) – Ethernet extension module (M1) – Detailed data structure

Variable no. (dec)	Address		Variable name	Variable description	Data type	Data size (byte)
	(dec)	(hex)				
1	0	0	ID [1]	Identification of the extension module	INT	2
2	2	2	Module Status [2]	Status of the extension module	INT	2
3...6	4...11	4...B	Reserved	-	INT	8
7...18	12...60	C...3C	Reserved	-	REAL	52

Table 54: I/O assembly instance 102 (0x66) – None extension module (M3) – Detailed data structure

Variable no.	Address		Variable name	Variable description	Data type	Data size (byte)
	(dec)	(hex)				
N+0 [4]	N+0 [4]	N+0 [4]	ID [1]	Identification of the extension module	INT	2
N+1 [4]	N+2 [4]	N+2 [4]	Module Status [3]	Status of the extension module	INT	2
N+(2...5) [4]	N+(4...10) [4]	N+(4...A) [4]	Reserved	-	INT	8
N+(6...18) [4]	N+(12...60) [4]	N+(C...3C) [4]	Reserved	-	REAL	52

1) Refer to chapter 7.2 to find the identification value (ID) of the extension modules.

2) Refer to chapter 8.2 to find the status value of the Ethernet extension module.

3) Refer to chapter 8.3 to find the status value of the None extension module.

4) N is the start address of the extension module. It depends on the slot the extension module is plugged into. Refer to Table 52.

MAN 1000338748 EN Version: D Status: RL (released | freigegeben) printed: 13.09.2022

Table 55: I/O assembly instance 102 (0x66) – Input extension module – Detailed data structure

Variable no.	Address		Variable name	Variable description	Data type	Data size (byte)	Unit
	dec	hex					
N+0 [1]	N+0 [1]	N+0 [1]	ID [2]	Identification of the extension module	INT	2	-
N+1 [1]	N+2 [1]	N+2 [1]	Module Status [3]	Status of the extension module	INT	2	-
N+2 [1]	N+4 [1]	N+4 [1]	DI1 Status [3]	Status of the digital input 1	INT	2	-
N+3 [1]	N+6 [1]	N+6 [1]	DI2 Status [3]	Status of the digital input 2	INT	2	-
N+4 [1]	N+8 [1]	N+8 [1]	AI1 Status [3]	Status of the analog input 1	INT	2	-
N+5 [1]	N+10 [1]	N+A [1]	AI2 Status [3]	Status of the analog input 2	INT	2	-
N+6 [1]	N+12 [1]	N+C [1]	DI1Frequency	Frequency value of the digital input 1	REAL	4	Hz
N+7 [1]	N+16 [1]	N+10 [1]	DI1Flow	Flow value of the digital input 1	REAL	4	L/min
N+8 [1]	N+20 [1]	N+14 [1]	DI1TotA	Value of the totaliser A on the digital input 1	REAL	4	L
N+9 [1]	N+24 [1]	N+18 [1]	DI1TotB	Value of the totaliser B on the digital input 1	REAL	4	L
N+10 [1]	N+28 [1]	N+1C [1]	DI2Frequency	Frequency value of the digital input 2	REAL	4	Hz
N+11 [1]	N+32 [1]	N+20 [1]	DI2Flow	Flow value of the digital input 2	REAL	4	L/min
N+12 [1]	N+36 [1]	N+24 [1]	DI2TotA	Value of the totaliser A on the digital input 2	REAL	4	L
N+13 [1]	N+40 [1]	N+28 [1]	DI2TotB	Value of the totaliser B on the digital input 2	REAL	4	L
N+14 [1]	N+44 [1]	N+2C [1]	AI1Raw	Analog input 1, current or voltage signal	REAL	4	V
N+15 [1]	N+48 [1]	N+30 [1]	AI1	Value of the analog input 1	REAL	4	[4]
N+16 [1]	N+52 [1]	N+34 [1]	AI2Raw	Analog input 2, current or voltage signal	REAL	4	V
N+17 [1]	N+56 [1]	N+38 [1]	AI2	Value of the analog input 2	REAL	4	[4]
N+18 [1]	N+60 [1]	N+3C [1]	Reserved	-	REAL	4	-

1) N is the start address of the extension module. It depends on the slot the extension module is plugged into. Refer to Table 52.

2) Refer to chapter 7.1 to find the identification value (ID) of the extension module.

3) Refer to chapter 8.4 to find the status value of the Input extension module.

4) Refer to chapter 9 to find the value of the unit

MAN 1000338748 EN Version: D Status: RL (released | freigegeben) printed: 13.09.2022

Table 56: I/O assembly instance 102 (0x66) – Output extension module – Detailed data structure

Variable no.	Address		Variable name	Variable description	Data type	Data size (byte)	Unit
	dec	hex					
N+0 [1]	N+0 [1]	N+0 [1]	ID [2]	Identification of the extension module	INT	2	-
N+1 [1]	N+2 [1]	N+2 [1]	Module Status [3]	Status of the extension module	INT	2	-
N+2 [1]	N+4 [1]	N+4 [1]	Reserved	-	INT	2	-
N+3 [1]	N+6 [1]	N+6 [1]	DO1	Value of digital output 1	INT	2	0: OFF (default) 1: ON 2: PWM or FastPWM 3: PFM 4: Pulse
N+4 [1]	N+8 [1]	N+8 [1]	DO2	Value of digital output 2	INT	2	0: OFF (default) 1: ON 2: PWM or FastPWM 3: PFM 4: Pulse
N+5 [1]	N+10 [1]	N+A [1]	Reserved	-	INT	2	-
N+6 [1]	N+12 [1]	N+C [1]	AO1	Value of analog output 1	REAL	4	mA
N+7 [1]	N+16 [1]	N+10 [1]	AO2	Value of analog output 2	REAL	4	mA
N+(8...18) [1]	N+(20...60) [1]	N+(14...3C) [1]	Reserved	-	REAL	44	-

1) N is the start address of the extension module. It depends on the slot the extension module is plugged into. Refer to Table 52.

2) Refer to chapter 7.1 to find the identification value (ID) of the extension module.

3) Refer to chapter 8.5 to find the status value of the Output extension module.

MAN 1000338748 EN Version: D Status: RL (released | freigegeben) printed: 13.09.2022

Table 57: I/O assembly instance 102 (0x66) – Conductivity extension module – Detailed data structure

Variable no.	Address		Variable name	Variable description	Data type	Data size (byte)	Unit
	dec	hex					
N+0 [1]	N+0 [1]	N+0 [1]	ID [2]	Identification of the extension module	INT	2	-
N+1 [1]	N+2 [1]	N+2 [1]	Module Status [3]	Status of the extension module	INT	2	-
N+2 [1]	N+4 [1]	N+4 [1]	Temp. Status [3]	Status of the temperature	INT	2	-
N+3 [1]	N+6 [1]	N+6 [1]	Cond. Status [3]	Status of the conductivity	INT	2	-
N+4 [1]	N+8 [1]	N+8 [1]	Reserved	-	INT	2	-
N+5 [1]	N+10 [1]	N+A [1]	Reserved	-	INT	2	-
N+6 [1]	N+12 [1]	N+C [1]	RTD	Input resistance of the temperature stage	REAL	4	Ω
N+7 [1]	N+16 [1]	N+10 [1]	Temperature	Temperature value	REAL	4	°C
N+8 [1]	N+20 [1]	N+14 [1]	Conductivity	Conductivity value	REAL	4	µS/cm
N+9 [1]	N+24 [1]	N+18 [1]	Resistivity	Resistivity value	REAL	4	Ω.cm
N+10 [1]	N+28 [1]	N+1C [1]	TDS	Quantity of dis-solved solids	REAL	4	ppm
N+11 [1]	N+32 [1]	N+20 [1]	Concentration	Mass concentration	REAL	4	%
N+(12...18) [1]	N+(36...60) [1]	N+(24...3C) [1]	Reserved	-	REAL	28	-

1) N is the start address of the extension module. It depends on the slot the extension module is plugged into. Refer to Table 52.

2) Refer to chapter 7.1 to find the identification value (ID) of the extension module.

3) Refer to chapter 8.6 to find the status value of the Conductivity extension module.

Table 58: I/O assembly instance 102 (0x66) – Variable size for the pH/ORP extension module – Detailed data structure

Variable no.	Address		Variable name	Variable description	Data type	Data size (byte)	Unit
	dec	hex					
N+0 [1]	N+0 [1]	N+0 [1]	ID [2]	Identification of the extension module	INT	2	-
N+1 [1]	N+2 [1]	N+2 [1]	Module Status [3]	Status of the extension module	INT	2	-
N+2 [1]	N+4 [1]	N+4 [1]	Temp. Status [3]	Status of the temperature	INT	2	-
N+3 [1]	N+6 [1]	N+6 [1]	pH/ORP Status [3]	Status of the pH or of the oxidation reduction potential	INT	2	-
N+4 [1]	N+8 [1]	N+8 [1]	Reserved	-	INT	2	-
N+5 [1]	N+10 [1]	N+A [1]	Reserved	-	INT	2	-
N+6 [1]	N+12 [1]	N+C [1]	RTD	Input resistance of the temperature stage	REAL	4	Ω
N+7 [1]	N+16 [1]	N+10 [1]	Temperature	Temperature value	REAL	4	°C
N+8 [1]	N+20 [1]	N+14 [1]	mV(pH)	pH value in mV	REAL	4	mV
N+9 [1]	N+24 [1]	N+18 [1]	mV(ORP)	Oxidation reduction potential value in mV	REAL	4	mV
N+10 [1]	N+28 [1]	N+1C [1]	pH	pH value	REAL	4	pH
N+11 [1]	N+32 [1]	N+20 [1]	Impedance Glass	Impedance of the glass electrode	REAL	4	Ω
N+12 [1]	N+36 [1]	N+24 [1]	Impedance Ref	Impedance of the reference electrode	REAL	4	Ω
N+(13...18) [1]	N+(40...60) [1]	N+(28...3C) [1]	Reserved	-	REAL	24	-

1) N is the start address of the extension module. It depends on the slot the extension module is plugged into. Refer to Table 52.

2) Refer to chapter 7.1 to find the identification value (ID) of the extension module.

3) Refer to chapter 8.7 to find the status value of the pH/ORP extension module.

6.4 Explicit messages or acyclic data

This chapter describes the object classes supported by the device Type 8619 for the explicit messages.

The object classes can have following types:

- standard (refer to the ODVA website).
- or specific for the device Type 8619 (described in chapter 6.4.7 to 6.4.10).

Table 59: Object classes supported by the device Type 8619 for explicit messages

Class code (dec)	Class code (hex)	Object class	Description	Number of instances	Detailed data structure
Standard object classes					
1	1	Identity object	Provides identification of and general information about the device.	1	See chapter 6.4.1
2	2	Message router object	Provides a messaging connection point through which a client may address a service to any object class or instance residing in the physical device.	1	-
4	4	I/O assembly object	Binds attributes of multiple objects. Object data can be sent or received via one single connection.	3	See chapter 6.4.2
6	6	Connection manager object	Contains connection specific attributes for triggering, transport, and connection type.	1	-
71	47	DLR	Device Level Ring	1	See chapter 6.4.3
72	48	QoS	Quality of Service	1	See chapter 6.4.4
245	F5	TCP/IP interface	Contains attributes for configuring the TCP/IP interface.	1	See chapter 6.4.5
246	F6	Ethernet link object	Contains connection-specific attributes like transmission rate, MAC address, or duplex mode.	2	See chapter 6.4.6
Device Type 8619 specific object classes					
100	64	I/O main board M0	Contains the variables of the main board M0.	1	See chapter 6.4.7
101	65	Functions	Contains the 12 functions of the main board M0.	12	See chapter 6.4.8
102	66	Extension modules	Contains the configuration of the extension modules M1 to M6.	6	See chapter 6.4.9
103	67	Ethernet extension module	Contains the PVNs of the Ethernet extension module M1.	1	See chapter 6.4.10
104	68	Constants	Contains the PVC constants of the main module M0	12	See chapter 6.4.11

The number of explicit messaging connections is limited to 6.

The minimum read/write cycle rate of an explicit messaging connection is 100 ms.

MAN 1000338748 EN Version: D Status: RL (released | freigegeben) printed: 13.09.2022

6.4.1 Device Identity object (class code 0x01)

Table 60: Attributes of the Device Identity object (class code 0x01)

Instance	Attribute no.	Name	Access rule	Description	Data type	Default value
1	1	Vendor ID	Get	Identification code for Bürkert as a vendor. The code is assigned by ODVA	UINT	87
	2	Device Type	Get	Classification of the device according to ODVA	UINT	43 (= generic device)
	3	Product Code	Get	Type of the Bürkert device	UINT	8619
	4	Revision	Get	Revision number of the device	STRUCT of 2 USINT	1.1
	5	Status	Get	Summary status of the device	WORD	1)
	6	Serial Number	Get	Serial number of the device	UDINT	Product serial number
	7	Product Name	Get	Name of the device in the menu structure	SHORT STRING	multiCELL
	8	State	Get	Present status of the device	USINT	1)
	9	Conf. Consist. Value	Get	Configuration consistency value	UINT	0x0000 1)

Table 61: Services provided by the device Type 8619 for the object instance of the Device Identity object

Service code	Service name	Description
0x0E	Get_Attribute_Single	Returns the contents of the specified attribute
0x01	Get_Attribute_All	Returns the contents of the instance or the specified attributes
0x05	Reset	Resets the device in mode "Reset type 0" or "Reset type 1". Refer to chapter 6.1.4.

1) Refer to the "CIP Specifications Library" volume 1 and volume 2 on the odva.org website. You must be a licensed vendor.

MAN 1000338748 EN Version: D Status: RL (released | freigegeben) printed: 13.09.2022

6.4.2 Device assembly object (class code 0x04)

This chapter describes the device assembly object for an explicit message.

→ To use this object as I/O assembly instance for an implicit message, refer to chapter 6.3.

Table 62: Attributes of the Device Assembly object (class code 0x04)

Instance	Attribute no.	Name	Access rule	Description	Data value
100	3	Data	Get	Assembly for the Main board and the 12 functions	ARRAY of BYTE
	4	Size	Get	Number of bytes in attribute 3	256
101	3	Data	Set	Assembly for PVNs	ARRAY of BYTE
	4	Size	Get	Number of bytes in attribute 3	80
102	3	Data	Get	Assembly for all extension modules	ARRAY of BYTE
	4	Size	Get	Number of bytes in attribute 3	384

Table 63: Services provided by the device Type 8619 for the object instance of the Device Assembly object

Service code	Service name	Description
0x0E	Get_Attribute_Single	Returns the contents of the specified attribute
0x10	Set_Attribute_Single	Modifies an attribute value

6.4.3 Device Level Ring object (class code 0x47)

Table 64: Attributes of the Device Level Ring object (class code 0x47)

Instance	Attribute no.	Name	Access rule	Description	Data type	Default value
1	1	Network Topology	Get	Current network topology	USINT	0 [1]
	2	Network Status	Get	Current network status	USINT	0 [1]
	10	Active Supervisor	Get	Active Supervisor Address	STRUCT	0 [1]
	12	Capability Flags	Get	DLR capability of the device	DWORD	130 [1]

Table 65: Services provided by the device Type 8619 for the object instance of the Device Level Ring object

Service code	Service name	Description
0x0E	Get_Attribute_Single	Returns the contents of the specified attribute
0x01	Get_Attribute_All	Returns the contents of the instance or the specified attributes

1) Refer to the "CIP Specifications Library" volume 1 and volume 2 on the odva.org website. You must be a licensed vendor.

MAN 1000338748 EN Version: D Status: RL (released | freigegeben) printed: 13.09.2022

6.4.4 Device Quality of Service object (class code 0x48)

Table 66: Attributes of the Device Quality of Service object (class code 0x48)

Instance	Attribute no.	Name	Access rule	Description	Data type	Default value
1	1	802.1Q Tag Enable	Get	Current network topology	USINT	0 [1]
	2	DSCP PTP Event	Set/Get	DSCP value for PTP Event frames	USINT	59 [1]
	3	DSCP PTP General	Set/Get	DSCP value for PTP general frames	USINT	47 [1]
	4	DSCP Urgent	Set/Get	DSCP value for implicit messages with urgent priority	USINT	55 [1]
	5	DSCP Scheduled	Set/Get	DSCP value for implicit messages with scheduled priority	USINT	47 [1]
	6	DSCP High	Set/Get	DSCP value for implicit messages with high priority	USINT	43 [1]
	7	DSCP Low	Set/Get	DSCP value for implicit messages with low priority	USINT	31 [1]
	8	DSCP Explicit	Set/Get	DSCP value for explicit messages	USINT	27 [1]

Table 67: Services provided by the device Type 8619 for the object instance of the Device Quality Of Service object

Service code	Service name	Description
0x0E	Get_Attribute_Single	Returns the contents of the specified attribute
0x10	Set_Attribute_Single	Modifies an attribute value

1) Refer to the "CIP Specifications Library" volume 1 and volume 2 on the odva.org website. You must be a licensed vendor.

MAN 1000338748 EN Version: D Status: RL (released | freigegeben) printed: 13.09.2022

6.4.5 Device TCP/IP Interface object (class code 0xF5)

Table 68: Attributes of the Device TCP/IP Interface object (class code 0xF5)

Instance	Attribute no.	Name	Access rule	Description	Data type	Default value
1	1	Status	Get	Interface status	DWORD	1 [1]
	2	Configuration Capability	Get	Interface capability flags	DWORD	0x95 [1]
	3	Configuration Control	Get / Set	Interface control flags	DWORD	0 [1]
	4	Physical Link Object	Get	Path to physical link object	STRUCT	(0x20 F6 24 01) [1]
	5	Interface Configuration	Get / Set	Interface Configuration (IP address, subnet mask, gateway address, etc.)	STRUCT	00 [1]
	6	Host Name	Get / Set	Device host name, which can be used for informational purposes.	STRING	multiCELL
	8	TTL Value	Get / Set	TTL value for EtherNet/IP multicast packets	USINT	1 [1]
	9	Mcast Config	Get / Set	IP multicast address configuration	STRUCT	(0x20 00 80 01 C0 EF) [1]
	10	SelectAcd	Get / Set	Activates the use of ACD	BOOL	1 [1]
	11	LastConflictDetected	Get / Set	Information related to the last conflict detected	STRUCT	0 [1]
	13	Encapsulation Inactivity Timeout	Get / Set	Number of seconds until TCP connection is closed on encapsulation inactivity	UINT	120 [1]

Table 69: Services provided by the device Type 8619 for the object instance of the Device TCP/IP Interface object

Service code	Service name	Description
0x0E	Get_Attribute_Single	Returns the contents of the specified attribute
0x01	Get_Attribute_All	Returns the contents of the instance or the specified attributes
0x10	Set_Attribute_Single	Modifies an attribute value

1) Refer to the "CIP Specifications Library" volume 1 and volume 2 on the odva.org website. You must be a licensed vendor.

MAN 1000338748 EN Version: D Status: RL (released | freigegeben) printed: 13.09.2022

6.4.6 Device Ethernet link object (class code 0xF6)

Table 70: Attributes of the Device Ethernet link object (class code 0xF6)

Instance	Attribute no.	Name	Access rule	Description	Data type	Default value
Port 1: instance 1 Port 2: instance 2	1	Interface Speed	Get	Interface speed currently in use	UDINT	100
	2	Interface Flags	Get	Interface status flags	DWORD	0 [1]
	3	Physical Address	Get	MAC layer address	ARRAY of 6 USINT's	Associated device MAC@
	4	Interface Counters	Get	Interface specific counters	STRUCT	0 [1]
	5	Media Counters	Get	Media specific counters	STRUCT	0 [1]
	6	Interface Control	Get / Set	Configuration for physical interface	STRUCT	1 [1]
	7	Interface Type	Get	Type of interface: twisted pair, fiber	USINT	2 [1]
	8	Interface Status	Get	Current Status of interface	USINT	1 [1]
	9	Admin Status	Get / Set	Administrative Status: enable, disable	USINT	1 [1]
	10	Interface Label	Get	Human readable identification	SHORT STRING	Port1 or port 2
	11	Interface Capability	Get	Indication of capabilities of the interface	STRUCT	(0x0E 00 00 00 04 0A 00 00 0A 00 01 64 00 00 64 00 01) [1]
	300	MDIX	Set	MDIX configuration MDI, MDIX, autoMDI	STRUCT	autoMDI

Table 71: Services provided by the device Type 8619 for the object instance of the Device Ethernet link object

Service code	Service name	Description
0x0E	Get_Attribute_Single	Returns the contents of the specified attribute
0x01	Get_Attribute_All	Returns the contents of the instance or the specified attributes
0x10	Set_Attribute_Single	Modifies an attribute value
0x4C	Get and Clear	Gets and clears the specific attribute (interface counters and media counters)

1) Refer to the "CIP Specifications Library" volume 1 and volume 2 on the odva.org website. You must be a licensed vendor.

6.4.7 I/O main board M0 object (class code 0x64)

Table 72: Attributes and variables of the I/O main board M0 object (class code 0x64)

Instance	Attribute no.	Variable no. [1]	Variable name	Variable description	Data type	Unit
1	1	1	ID [2]	Identification of the main board	INT	-
	2	2	Module Status [3]	Status of the main board	INT	-
	3	3	M1-M3 Status [3]	Status of the extension modules	INT	-
	4	4	M4-M6 Status [3]	Status of the extension modules	INT	-
	5	5	SystemSwitch [3]	Status of the SystemSwitch	INT	-
	6	6	DI1 Status [3]	Status of the digital input 1	INT	-
	7	7	DI2 Status [3]	Status of the digital input 2	INT	-
	8	8	Reserved	-	INT	-
	9	9	DO1	Value of the digital output 1	INT	0: OFF (default) 1: ON 2: PWM or FastPWM 3: PFM 4: Pulse
	9	9	DO2	Value of the digital output 2	INT	0: OFF (default) 1: ON 2: PWM or FastPWM 3: PFM 4: Pulse
	10	10	AO1	Value of the analog output 1	REAL	mA
	11	11	AO2	Value of the analog output 2	REAL	mA
	12	12	DI1Frequency	Frequency value of the digital input 1	REAL	Hz
	13	13	DI1Flow	Flow value of the digital input 1	REAL	L/min
	14	14	DI1TotA	Value of the totaliser A on the digital input 1	REAL	L
	15	15	DI1TotB	Value of the totaliser B on the digital input 1	REAL	L
	16	16	DI2Frequency	Frequency value of the digital input 2	REAL	Hz
	17	17	DI2Flow	Flow value of the digital input 2	REAL	L/min
	18	18	DI2TotA	Value of the totaliser A on the digital input 2	REAL	L
	19	19	DI2TotB	Value of the totaliser B on the digital input 2	REAL	L
	20	20	Reserved	-	REAL	-

1) Assembly instance 100 (0x64)

2) Refer to chapter 7.1 to find the identification value (ID) of the main board

3) Refer to chapter 8.1 to find the status value of the main board.

MAN 1000338748 EN Version: D Status: RL (released | freigegeben) printed: 13.09.2022

Table 73: Services provided by the device Type 8619 for the object instance of the I/O main board M0 object

Service code	Service name	Description
0x0E	Get_Attribute_Single	Returns the contents of the specified attribute

6.4.8 Function object (class code 0x65)

Table 74 describes the attributes and variables of the functions F1 to F12 of the function object. The attributes and variables depend on the function type. The following function types are available:

- A+B, A-B, A/B, A*B, MATH, PASS, REJECT or DEVIAT, refer to Table 75
- PROP, refer to Table 76.
- ON/OFF, refer to Table 77.
- PID, refer to Table 78.
- Time dosing, refer to Table 79.
- Volume dosing, refer to Table 80.

Table 74: Attributes and variables of the function object (class code 0x65)

Instance	Attribute no. (dec)	Variable no. [1]	Function no.	Variable name	Variable description	Data type
1	1	21	F1	ID [2]	Identification of the function 1	INT
	2	22		Function Status [3]	Status of the function	INT
	3	23		Value 1	Depend on the selected function. See Table 75 to Table 80.	REAL
	4	24		Value 2		REAL
	5	25		Value 3		REAL
2	1	26	F2	ID [2]	Identification of the function 2	INT
	2	27		Function Status [3]	Status of the function	INT
	3	28		Value 1	Depend on the selected function. See Table 75 to Table 80.	REAL
	4	29		Value 2		REAL
	5	30		Value 3		REAL
3	1	31	F3	ID [2]	Identification of the function 3	INT
	2	32		Function Status [3]	Status of the function	INT
	3	33		Value 1	Depend on the selected function. See Table 75 to Table 80.	REAL
	4	34		Value 2		REAL
	5	35		Value 3		REAL

1) Assembly instance 100 (0x64)

2) Refer to chapter 7.2 to find the identification value (ID) of the functions.

3) Refer to chapter 8.8...chapter 8.14 to find the status value of the function.

Instance	Attribute no. (dec)	Variable no. [1]	Function no.	Variable name	Variable description	Data type
4	1	36	F4	ID [2]	Identification of the function 4	INT
	2	37		Function Status [3]	Status of the function	INT
	3	38		Value 1	Depend on the selected function. See Table 75 to Table 80.	REAL
	4	39		Value 2		REAL
	5	40		Value 3		REAL
5	1	41	F5	ID [2]	Identification of the function 5	INT
	2	42		Function Status [3]	Status of the function	INT
	3	43		Value 1	Depend on the selected function. See Table 75 to Table 80.	REAL
	4	44		Value 2		REAL
	5	45		Value 3		REAL
6	1	46	F6	ID [2]	Identification of the function 6	INT
	2	47		Function Status [3]	Status of the function	INT
	3	48		Value 1	Depend on the selected function. See Table 75 to Table 80.	REAL
	4	49		Value 2		REAL
	5	50		Value 3		REAL
7	1	51	F7	ID [2]	Identification of the function 7	INT
	2	52		Function Status [3]	Status of the function	INT
	3	53		Value 1	Depend on the selected function. See Table 75 to Table 80.	REAL
	4	54		Value 2		REAL
	5	55		Value 3		REAL
8	1	56	F8	ID [2]	Identification of the function 8	INT
	2	57		Function Status [3]	Status of the function	INT
	3	58		Value 1	Depend on the selected function. See Table 75 to Table 80.	REAL
	4	59		Value 2		REAL
	5	60		Value 3		REAL
9	1	61	F9	ID [2]	Identification of the function 9	INT
	2	62		Function Status [3]	Status of the function	INT
	3	63		Value 1	Depend on the selected function. See Table 75 to Table 80.	REAL
	4	64		Value 2		REAL
	5	65		Value 3		REAL

1) Assembly instance 100 (0x64)

2) Refer to chapter 7.2 to find the identification value (ID) of the functions.

3) Refer to chapter 8.8...chapter 8.14 to find the status value of the function.

Instance	Attribute no. (dec)	Variable no. [1]	Function no.	Variable name	Variable description	Data type
10	1	66	F10	ID [2]	Identification of the function 10	INT
	2	67		Function Status [3]	Status of the function	INT
	3	68		Value 1	Depend on the selected function. See Table 75 to Table 80.	REAL
	4	69		Value 2		REAL
	5	70		Value 3		REAL
11	1	71	F11	ID [2]	Identification of the function 11	INT
	2	72		Function Status [3]	Status of the function	INT
	3	73		Value 1	Depend on the selected function. See Table 75 to Table 80.	REAL
	4	74		Value 2		REAL
	5	75		Value 3		REAL
12	1	76	F12	ID [2]	Identification of the function 12	INT
	2	77		Function Status [3]	Status of the function	INT
	3	78		Value 1	Depend on the selected function. See Table 75 to Table 80.	REAL
	4	79		Value 2		REAL
	5	80		Value 3		REAL

*Table 75: Attributes and variables of the functions A+B / A-B / A/B / A*B / MATH / PASS / REJECT / DEVIAT*

Instance	Attribute no. (dec)	Variable no. [1]	Function number	Variable name	Variable description	Data type	Data size (byte)	Unit
[4]	1	[5]	Fx [6]	ID [2]	Identification of the function	INT	2	-
	2	[5]		Function Status [3]	Status of the function	INT	2	-
	3	[5]		Result	Result of the function	REAL	4	[7]
	4	[5]		Reserved	-	REAL	4	-
	5	[5]		Reserved	-	REAL	4	-

1) Assembly instance 100 (0x64)

2) Refer to chapter 7.2 to find the identification value (ID) of the functions.

3) Refer to chapter 8.8...chapter 8.14 to find the status value of the function.

4) The instance number is the function number and is given in Table 74.

5) The variable number depends on the function number and is given in Table 74.

6) Fx is the function number given in Table 74.

7) Refer to chapter 9 to find the value of the unit.

Table 76: Attributes and variables of the function PROP

Instance	Attribute no. (dec)	Variable no. [1]	Function number	Variable name	Variable description	Data type	Data size (byte)	Unit
[4]	1	[5]	Fx [6]	ID [2]	Identification of the function	INT	2	-
	2	[5]		Function Status [3]	Status of the function	INT	2	-
	3	[5]		Command	Value of the command	REAL	4	%
	4	[5]		Reserved	-	REAL	4	-
	5	[5]		Reserved	-	REAL	4	-

Table 77: Attributes and variables of the function ON/OFF

Instance	Attribute no. (dec)	Variable no. [1]	Function number	Variable name	Variable description	Data type	Data size (byte)	Unit
[4]	1	[5]	Fx [6]	ID [2]	Identification of the function	INT	2	-
	2	[5]		Function Status [3]	Status of the function	INT	2	-
	3	[5]		Command	Value of the command	REAL	4	%
	4	[5]		SetPoint	Value of the setpoint	REAL	4	[7]
	5	[5]		Reserved	-	REAL	4	-

Table 78: Attributes and variables of the function PID

Instance	Attribute no. (dec)	Variable no. [1]	Function number	Variable name	Variable description	Data type	Data size (byte)	Unit
[4]	1	[5]	Fx [6]	ID [2]	Identification of the function	INT	2	-
	2	[5]		Function Status [3]	Status of the function	INT	2	-
	3	[5]		Command 1	Command of the channel 1	REAL	4	%
	4	[5]		Command 2	Command of the channel 2	REAL	4	%
	5	[5]		SetPoint 1	Setpoint of the channel 1	REAL	4	[7]

1) Assembly instance 100 (0x64)

2) Refer to chapter 7.2 to find the identification value (ID) of the functions.

3) Refer to chapter 8.8...chapter 8.14 to find the status value of the function.

4) The instance number is the function number and is given in Table 74.

5) The variable number depends on the function number and is given in Table 74.

6) Fx is the function number given in Table 74.

7) Refer to chapter 9 to find the value of the unit.

MAN 1000338748 EN Version: D Status: RL (released | freigegeben) printed: 13.09.2022

Table 79: Attributes and variables of the function Time Dosing

Instance	Attribute no. (dec)	Variable no. [1]	Function number	Variable name	Variable description	Data type	Data size (byte)	Unit
[4]	1	[5]	Fx [6]	ID [2]	Identification of the function	INT	2	-
	2	[5]		Function Status [3]	Status of the function	INT	2	-
	3	[5]		Command 1	Command of the channel 1	REAL	4	%
	4	[5]		Command 2	Command of the channel 2	REAL	4	%
	5	[5]		Reserved	-	REAL	4	-

Table 80: Attributes and variables of the function Volume Dosing

Instance	Attribute no. (dec)	Variable no. [1]	Function number	Variable name	Variable description	Data type	Data size (byte)	Unit
[4]	1	[5]	Fx [6]	ID [2]	Identification of the function	INT	2	-
	2	[5]		Function Status [3]	Status of the function	INT	2	-
	3	[5]		Command	Value of the command	REAL	4	%
	4	[5]		SetPoint	Value of the setpoint	REAL	4	[7]
	5	[5]		Volume	Value of the total volume metered	REAL	4	[7]

Table 81: Services provided by the device Type 8619 for the object instance of the function object

Service code	Service name	Description
0x0E	Get_Attribute_Single	Returns the contents of the specified attribute

1) Assembly instance 100 (0x64)

2) Refer to chapter 7.2 to find the identification value (ID) of the functions.

3) Refer to chapter 8.8...chapter 8.14 to find the status value of the function.

4) The instance number is the function number and is given in Table 74.

5) The variable number depends on the function number and is given in Table 74.

6) Fx is the function number given in Table 74.

7) Refer to chapter 9 to find the value of the unit.

MAN 1000338748 EN Version: D Status: RL (released | freigegeben) printed: 13.09.2022

6.4.9 Extension module object (class code 0x66)

Table 82 shows the variable numbers, the instance numbers and attribute numbers of the extension modules, depending on the slot number the extension module is plugged into.

The Ethernet extension module is always plugged into slot M1. Table 83 describes the attributes and variables of the Ethernet extension module.

Slot M3 is empty. Table 84 describes the attributes and variables of the "None" extension module.

Slots M2, M4, M5 and M6 can have one of the following extension modules:

- Input (attributes and variables described in Table 85).
- Output (attributes and variables described in Table 86).
- Conductivity (attributes and variables described in Table 87).
- pH/ORP (attributes and variables described in Table 88).
- None (empty, described in Table 84).

Table 82: Extension module object (class code 0x66) – General structure

Module slot	Type of the extension module	Instance no.	Attribute no. (dec)	Variable no. [1]	Detailed data structure
M1	Ethernet	**1**	1...19	1...19	See Table 83
M2	• Input • Output • Conductivity • pH/ORP • None	**2**	1...19	20...38	See Table 84 to Table 88
M3	None	**3**	1...19	39...57	See Table 84
M4	• Input • Output • Conductivity • pH/ORP • None	**4**	1...19	58...76	See Table 85 to Table 88
M5	• Input • Output • Conductivity • pH/ORP • None	**5**	1...19	77...95	See Table 85 to Table 88
M6	• Input • Output • Conductivity • pH/ORP • None	**6**	1...19	96...114	See Table 85 to Table 88

1) Assembly instance 102 (0x66)

MAN 1000338748 EN Version: D Status: RL (released | freigegeben) printed: 13.09.2022

Table 83: Extension module object (class code 0x66) – Ethernet extension module (M1) – Detailed data structure

Instance no.	Attribute no. (dec)	Variable no. [1]	Variable name	Variable description	Data type	Data size (byte)
1	1	1	ID [2]	Identification of the main board	INT	2
	2	2	Module Status [3]	Status of the extension module	INT	2
	3...6	3...6	Reserved	-	INT	8
	7...19	7...19	Reserved	-	REAL	52

Table 84: Extension module object (class code 0x66) – None extension module (M3) – Detailed data structure

Instance no.	Attribute no. (dec)	Variable no. [1]	Variable name	Variable description	Data type	Data size (byte)
3	1	39	ID [2]	Identification of the main board	INT	2
	2	40	Module Status [4]	Status of the extension module	INT	2
	3...6	41...44	Reserved	-	INT	8
	7...19	45...57	Reserved	-	REAL	52

1) Assembly instance 102 (0x66)

2) Refer to chapter 7.2 to find the identification value (ID) of the extension modules.

3) Refer to chapter 8.2 to find the status value of the Ethernet extension module.

4) Refer to chapter 8.3 to find the status value of the None extension module.

MAN 1000338748 EN Version: D Status: RL (released | freigegeben) printed: 13.09.2022

Table 85: Extension module object (class code 0x66) – Input extension module – Detailed data structure

Instance no.	Attribute no. (dec)	Variable no. [1]	Variable name	Variable description	Data type	Data size (byte)	Unit
[2]	1	[3]	ID [4]	Identification of the main board	INT	2	-
	2	[3]	Module Status [5]	Status of the extension module	INT	2	-
	3	[3]	DI1 Status [5]	Status of the digital input 1	INT	2	-
	4	[3]	DI2 Status [5]	Status of the digital input 2	INT	2	-
	5	[3]	AI1 Status [5]	Status of the analog input 1	INT	2	-
	6	[3]	AI2 Status [5]	Status of the analog input 2	INT	2	-
	7	[3]	DI1Frequency	Frequency value of the digital input 1	REAL	4	Hz
	8	[3]	DI1Flow	Flow value of the digital input 1	REAL	4	L/min
	9	[3]	DI1TotA	Value of the totaliser A on the digital input 1	REAL	4	L
	10	[3]	DI1TotB	Value of the totaliser B on the digital input 1	REAL	4	L
	11	[3]	DI2Frequency	Frequency value of the digital input 2	REAL	4	Hz
	12	[3]	DI2Flow	Flow value of the digital input 2	REAL	4	L/min
	13	[3]	DI2TotA	Value of the totaliser A on the digital input 2	REAL	4	L
	14	[3]	DI2TotB	Value of the totaliser B on the digital input 2	REAL	4	L
	15	[3]	AI1Raw	Analog input 1, current or voltage signal	REAL	4	mA
	16	[3]	AI1	Value of the analog input 1	REAL	4	[6]
	17	[3]	AI2Raw	Analog input 2, current or voltage signal	REAL	4	mA
	18	[3]	AI2	Value of the analog input 2	REAL	4	[6]
	19	[3]	Reserved	-	REAL	4	-

1) Assembly instance 102 (0x66)

2) The instance number depends on the slot the extension module is plugged into and is given in Table 82.

3) The variable numbers depend on the slot the extension module is plugged into and are given in Table 82.

4) Refer to chapter 7.1 to find the identification value (ID) of the extension module.

5) Refer to chapter 8.4 to find the status value of the Input extension module.

6) Refer to chapter 9 to find the value of the unit

MAN 1000338748 EN Version: D Status: RL (released | freigegeben) printed: 13.09.2022

Table 86: Extension module object (class code 0x66) – Output extension module – Detailed data structure

Instance no.	Attribute no. (dec)	Variable no. [1]	Variable name	Variable description	Data type	Data size (byte)	Unit
[2]	1	[3]	ID [4]	Identification of the extension module	INT	2	-
	2	[3]	Module Status [5]	Status of the extension module	INT	2	-
	3	[3]	Reserved	-	INT	2	-
	4	[3]	DO1	Value of digital output 1	INT	2	0: OFF (default) 1: ON 2: PWM or FastPWM 3: PFM 4: Pulse
	5	[3]	DO2	Value of digital output 2	INT	2	0: OFF (default) 1: ON 2: PWM or FastPWM 3: PFM 4: Pulse
	6	[3]	Reserved	-	INT	2	-
	7	[3]	AO1	Value of analog output 1	REAL	4	mA
	8	[3]	AO2	Value of analog output 2	REAL	4	mA
	9...19	[3]	Reserved	-	REAL	44	-

1) Assembly instance 102 (0x66)

2) The instance number depends on the slot the extension module is plugged into and is given in Table 82.

3) The variable numbers depend on the slot the extension module is plugged into and are given in Table 82.

4) Refer to chapter 7.1 to find the identification value (ID) of the extension module.

5) Refer to chapter 8.5 to find the status value of the Output extension module.

MAN 1000338748 EN Version: D Status: RL (released | freigegeben) printed: 13.09.2022

Table 87: Extension module object (class code 0x66) – Conductivity extension module – Detailed data structure

Instance no.	Attribute no. (dec)	Variable no. [1]	Variable name	Variable description	Data type	Data size (byte)	Unit
[2]	1	[3]	ID [4]	Identification of the extension module	INT	2	-
	2	[3]	Module Status [5]	Status of the extension module	INT	2	-
	3	[3]	Temp. Status [5]	Status of the temperature	INT	2	-
	4	[3]	Cond. Status [5]	Status of the conductivity	INT	2	-
	5	[3]	Reserved	-	INT	2	-
	6	[3]	Reserved	-	INT	2	-
	7	[3]	RTD	Input resistance of the temperature stage	REAL	4	Ω
	8	[3]	Temperature	Temperature value	REAL	4	°C
	9	[3]	Conductivity	Conductivity value	REAL	4	µS/cm
	10	[3]	Resistivity	Resistivity value	REAL	4	Ω.cm
	11	[3]	TDS	Quantity of dissolved solids	REAL	4	ppm
	12	[3]	Concentration	Mass concentration	REAL	4	%
	13...19	[3]	Reserved	-	REAL	28	-

1) Assembly instance 102 (0x66)

2) The instance number depends on the slot the extension module is plugged into and is given in Table 82.

3) The variable numbers depend on the slot the extension module is plugged into and are given in Table 82.

4) Refer to chapter 7.1 to find the identification value (ID) of the extension module.

5) Refer to chapter 8.6 to find the status value of the Conductivity extension module.

Table 88: Extension module object (class code 0x66) – pH/ORP extension module – Detailed data structure

Instance no.	Attribute no. (dec)	Variable no. [1]	Variable name	Variable description	Data type	Data size (byte)	Unit
[2]	1	[3]	ID [4]	Identification of the extension module	INT	2	-
	2	[3]	Module Status [5]	Status of the extension module	INT	2	-
	3	[3]	Temp. Status [5]	Status of the temperature	INT	2	-
	4	[3]	pH/ORP Status [5]	Status of the pH or of the oxidation reduction potential	INT	2	-
	5	[3]	Reserved	-	INT	2	-
	6	[3]	Reserved	-	INT	2	-
	7	[3]	RTD	Input resistance of the temperature stage	REAL	4	Ω
	8	[3]	Temperature	Temperature value	REAL	4	°C
	9	[3]	mV(pH)	pH value in mV	REAL	4	mV
	10	[3]	mV(ORP)	Oxidation reduction potential value in mV	REAL	4	mV
	11	[3]	pH	pH value	REAL	4	pH
	12	[3]	Impedance Glass	Impedance of the glass electrode	REAL	4	Ω
	13	[3]	Impedance Ref	Impedance of the reference electrode	REAL	4	Ω
	14...19	[3]	Reserved	-	REAL	24	-

Table 89: Services provided by the device Type 8619 for the object instance of the extension module object

Service code	Service name	Description
0x0E	Get_Attribute_Single	Returns the contents of the specified attribute

1) Assembly instance 102 (0x66)

2) The instance number depends on the slot the extension module is plugged into and is given in Table 82.

3) The variable numbers depend on the slot the extension module is plugged into and are given in Table 82.

4) Refer to chapter 7.1 to find the identification value (ID) of the extension module.

5) Refer to chapter 8.7 to find the status value of the pH/ORP extension module.

6.4.10 Ethernet module object (class code 0x67)

The attributes of this object are used to write the data from the PLC to the device Type 8619.

Table 90: Attributes and variables of the Ethernet extension module object (class code 0x67)

Instance	Attribute no. (dec)	Variable no. [1]	Variable	Variable description	Data type	Data size (byte)
1	1	1	PVN1	Process Value Network 1	REAL	4
	2	2	PVN2	Process Value Network 2	REAL	4
	3	3	PVN3	Process Value Network 3	REAL	4
	4	4	PVN4	Process Value Network 4	REAL	4
	5	5	PVN5	Process Value Network 5	REAL	4
	6	6	PVN6	Process Value Network 6	REAL	4
	7	7	PVN7	Process Value Network 7	REAL	4
	8	8	PVN8	Process Value Network 8	REAL	4
	9	9	PVN9	Process Value Network 9	REAL	4
	10	10	PVN10	Process Value Network 10	REAL	4
	11	11	PVN11	Process Value Network 11	REAL	4
	12	12	PVN12	Process Value Network 12	REAL	4
	13	13	PVN13	Process Value Network 13	REAL	4
	14	14	PVN14	Process Value Network 14	REAL	4
	15	15	PVN15	Process Value Network 15	REAL	4
	16	16	PVN16	Process Value Network 16	REAL	4
	17	17	PVN17	Process Value Network 17	REAL	4
	18	18	PVN18	Process Value Network 18	REAL	4
	19	19	PVN19	Process Value Network 19	REAL	4
	20	20	PVN20	Process Value Network 20	REAL	4

Table 91: Services provided by the device Type 8619 for the object instance of the Ethernet extension module object

Service code	Service name	Description
0x0E	Get_Attribute_Single	Returns the contents of the specified attribute
0x10	Set_Attribute_Single	Modifies an attribute value

1) Assembly instance 101 (0x65)

MAN 1000338748 EN Version: D Status: RL (released | freigegeben) printed: 13.09.2022

6.4.11 Constants object (class code 0x68)

Table 92: Attributes and variables of the Constants object (class code 0x68)

Instance	Attribute no. (dec)	Variable	Variable description	Data type	Data size (byte)
1...12	1	ID [1)]	Identification of the PVC constants	INT	2
1...12	2	PVC Status	Status of the constant	INT	2
1...12	3	PVC Value	Value of the constant	REAL	4

Table 93: Services provided by the device Type 8619 for the object instance of the Constants object

Service code	Service name	Description
0x0E	Get_Attribute_Single	Returns the contents of the specified attribute

1) Refer to chapter 7.3 to find the identification value (ID) of the Constants.

MAN 1000338748 EN Version: D Status: RL (released | freigegeben) printed: 13.09.2022

6.5 Example of communication between the device Type 8619 and a PLC Type Rockwell CompactLogix 1769-L24ER-QBFC1B

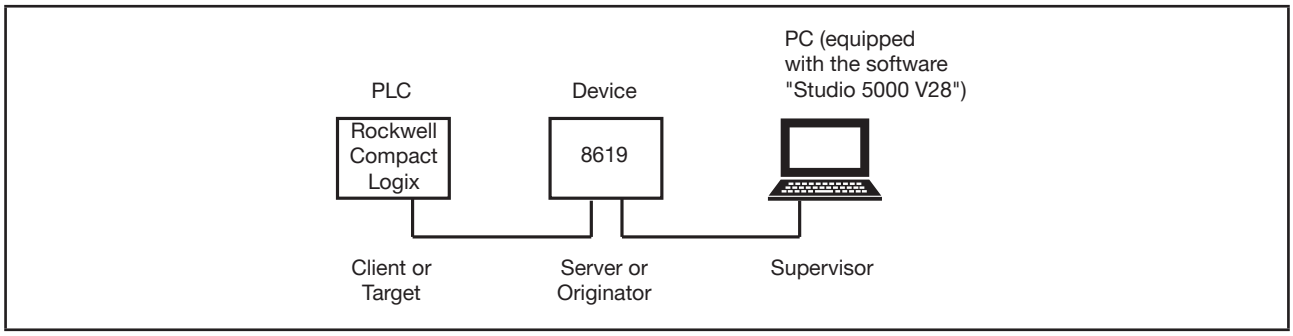

Fig. 1 : Example of a daisy chain network for the EtherNet/IP protocol

The device has the following hardware configuration:

- a main board M0,
- an Ethernet extension module M1,
- 4 extension modules: Conductivity module in slot M2, pH/ORP module in slot M4, Output module in slot M5 and Input module in slot M6.

In this example, the goal is to read out a pH value and to write a value on PVN1.

To exchange data between the device Type 8619 and the PLC over the EtherNet/IP network, do the following steps:

1. Do the settings related to EtherNet/IP on the device Type 8619 (see chapter 6.5.1).
2. Check the communication between the device and the PC (see chapter 6.5.2).

On the PC connected to the network:

3. Register the device EDS configuration file (see chapter 6.5.3).
4. Add a device into the project (see chapter 6.5.4).
5. Configure an implicit message (see chapter 6.5.5).
6. Configure an explicit message (see chapter 6.5.6).
7. Install the program from the PC to the PLC (see chapter 6.5.7).
8. Monitor the data between the device Type 8619 and the PLC (see chapter 6.5.8).

6.5.1 Doing the settings on the device Type 8619

1. Select the protocol used:

→ Go to "Menu ----► Parameters ----► M1:Ethernet ----► Protocol".

→ Select “Ethernet/IP”.

MAN 1000338748 EN Version: D Status: RL (released | freigegeben) printed: 13.09.2022

2. Set the IP address of the device. To manually set the IP address:

→ Go to "Menu ----► Parameters ----► M1:Ethernet ----► IP settings ----► Mode ----► Manual".

→ Go to "Menu ----► Parameters ----► M1:Ethernet ----► IP settings ----► IP address".

→ Enter the IP address (default value is 0.0.0.0).

3. Set the Netmask of the device:

→ Go to "Menu ----► Parameters ----► M1:Ethernet ----► IP settings ----► Netmask".

→ Enter the Netmask (default value is 0.0.0.0).

4. Set the Gateway address of the device:

→ Go to "Menu ----► Parameters ----► M1:Ethernet ----► IP settings ----► Gateway".

→ Enter the Gateway address (default value is 0.0.0.0).

5. If necessary, select the unit of the process values network PVN:

→ Refer to the Operating Instructions of the device Type 8619.

✔ The settings related to the EtherNet/IP protocol are completed on the device.

→ To take the settings into account, restart the device Type 8619.

6.5.2 Checking the communication between the device and the PC

→ From a PC, send a ping to the device Type 8619 with the configured IP address.

✔ If the device answers, the device is ready to communicate with the PLC.

6.5.3 Register the device EDS configuration file

The following procedure uses the software "Studio 5000 V28" installed on the PC. The software Studio 5000 V28 is used to configure the PLC CompactLogix 1769-L24ER-QBFC1B from Rockwell Automation and the other equipment of the network.

→ Before using the Studio 5000 V28 software, read the related Operating Instructions and the Operating Instructions of the PLC.

→ Start the software Studio 5000 V28.

→ Make sure the network settings have been done for the PLC.

→ Download the EDS-file of the device on the PC. The EDS-file is available at: country.burkert.com.

→ Install the EDS-file on the PC with the Studio 5000 V28 software.

In Studio 5000 V28:

→ Go to “Tools ----► EDS Hardware Installation Tool”.

→ Choose “Register an EDS file(s)” and select the EDS-file of the device Type 8619.

MAN 1000338748 EN Version: D Status: RL (released | freigegeben) printed: 13.09.2022

6.5.4 Adding a device Type 8619 to the project

→ Before using Studio 5000 V28 software, read the related Operating Instructions and the Operating Instructions of the PLC.

In Studio 5000 V28:

→ In the tab “Controller Organizer ----► I/O Configuration", right click on "Ethernet" and select "New Module": a new window "Select the type of module" is displayed.

→ In the column “Catalog Number”, select the “8619-multiCELL” module and click on "Create": a new window "New module" is displayed.

→ Fill in the name (e.g. "mC1") and the IP address of the device (see chapter 6.5.1) and click on "Change": a new window "Module definition" is displayed.

→ Select the connection "ExOwner_Main_Functions_M1" and if your device is configured with at least one extension module (in slot M2), select also the connection "InputOnly_All_Extension_Modules" (see Table 42, page 58).

→ In the column "Size", select "INT" as type of the variable and click on "OK".
(The choice "INT" allows you to read/write all the variables.
The choice "REAL" allows you to read/write only the variables with type "REAL").

→ Back to window "New module", set the RPI time for the connection(s) at 100 ms (see chapter 6.1.5) and validate.

→ Do the remaining configuration according to the network installation.

✓ The module "8619-multiCELL_mC1" is added in the tab “Controller Organizer ----► I/O Configuration ----► Ethernet”.

6.5.5 Reading the pH value (configuring an implicit message)

→ Before using Studio 5000 V28 software, read the related Operating Instructions and the Operating Instructions of the PLC.

The following example shows how to read the pH value of the pH/ORP extension module in slot 4.

→ Read the address of the extension module in Table 52, page 66. For an extension module plugged into slot M4, the start address is [96] in WORD ([192] in bytes]), because the PLC requests "INT" values.

→ Read the address of the pH value of the pH/ORP extension module in Table 58, page 71. For the pH value, the start address is [14] in WORD ([28] in bytes), because the PLC requests "INT" values.

→ Calculate the start address of the variable by adding the previous addresses in decimal. For the pH value, the start address is 96 + 14 = 110 in "INT".

→ Define the complete address with the column "data size" of the variable in Table 58, page 71. For the pH value, the data size is 4 bytes.

✓ The complete address of the pH value is [110..111] in "INT".

→ To read the value, use the "MOV, BTD and COP" instruction. Refer to the Operating Instructions of the software Studio 5000 V28.

MAN 1000338748 EN Version: D Status: RL (released | freigegeben) printed: 13.09.2022

6.5.6 Configuring an explicit message

→ Before using Studio 5000 V28 software, read the related Operating Instructions and the Operating Instructions of the PLC.

In Studio 5000 V28:

→ In tab “Controller Organizer ----► Tasks”, add a routine or use the main routine listed in “MainProgram”.

→ In the routine, insert an MSG function listed in the “Input/Output” instruction.

→ Fill and select the parameters according to chapter 6.4 Explicit messages or acyclic data.

6.5.7 Install the program from the PC to the PLC

→ Refer to the related Operating Instructions of software Studio 5000 V28 to compile the program, transfer it to the PLC and run the PLC.

6.5.8 Monitoring data

→ Before using Studio 5000 V28 software, read the related Operating Instructions and the Operating Instructions of the PLC.

In Studio 5000 V28:

→ To read the data, you can:

- Either select the tags "MultiCell:I1" and "MultiCell:O1" in the left tab “Controller Organizer ----► Controller + PROJECT_NAME ----► Controller Tags”.
- Or, if you use the mainRoutine, go to “Controller Organizer ----► Tasks ----► Main tasks ----► MainProgram ----► Parameters and Local Tags”.

MAN 1000338748 EN Version: D Status: RL (released | freigegeben) printed: 13.09.2022

7 DESCRIPTION OF THE VARIABLE "ID"

The variable "ID" is used in the data exchange between the device and the PLC. It reserves 2 bytes (16 bits).

The ID is used:

- to identify which board, extension module, function or PVCs exchanges data with the PLC.
- to find out which slot of the device the board or the extension module is plugged into.
- to find out the version number of the structure of the data that is exchanged between the device and the PLC.
- to find out the revision number of the structure of the data that is exchanged between the device and the PLC.

This supplement only describes the current data structure:

- with version number 0000 and revision number 0001 (extension modules and main board);
- with version number 0001 (functions).

The ID of the main board and the extension modules are described in chapter 7.1.

The ID of the functions are described in chapter 7.2.

The ID of the PVCs are described in chapter 7.3.

MAN 1000338748 EN Version: D Status: RL (released | freigegeben) printed: 13.09.2022

7.1 ID of the main board and of the extension modules

Table 94: Bit distribution of variable ID of the main board and of the extension modules

Bits of the main board ID or of the extension module ID			
15...12	11...8	7...4	3...0

Table 95: Bit description of the variable ID of the main board or of the extension modules

Bit range	Description	Values
15...12	Main board or type of the extension module	0000 = empty slot 0001 = Main board 0010 = Input extension module 0011 = Output extension module 0100 = Conductivity extension module 0101 = pH/ORP extension module 0110 = Ethernet extension module The other values are reserved.
11...8	Slot number	0000 = Slot M0 0001 = Slot M1 0010 = Slot M2 0011 = Slot M3 0100 = Slot M4 0101 = Slot M5 0110 = Slot M6 The other values are reserved.
7...4	Version number of the data structure	0000 = current version The other values are reserved.
3...0	Revision number of the data structure	0000 = previous revision 0001 = current revision The other values are reserved.

Example:

For the current version and the current revision of the data structure, a pH/ORP extension module plugged into slot M4 has the following ID:

$(0101\ 0100\ 0000\ 0001)_{bin} = (0x5401)_{hex} = (21505)_{dec}$

For the current version and the current revision of the data structure,

- The main board is always plugged into slot M0. The ID of the main board is $(0001\ 0000\ 0000\ 0001)_{bin} = (0x1001)_{hex} = (4097)_{dec}$.
- The Ethernet extension module is always plugged into slot M1. The ID of the Ethernet extension module is $(0110\ 0001\ 0000\ 0001)_{bin} = (0x6101)_{hex} = (24833)_{dec}$.
- The slot M3 is always empty. Its ID is $(0000\ 0011\ 0000\ 0001)_{bin} = (0x0301)_{hex} = (769)_{dec}$.

MAN 1000338748 EN Version: D Status: RL (released | freigegeben) printed: 13.09.2022

7.2 ID of the functions

Table 96: Bit distribution of variable ID of the functions

Bits of a function ID			
15...12	11...8	7...4	3...0

Table 97: Bit description of the variable ID of the functions

Bit range	Description	Values
15...12	Reserved	1111
11...8	Function type	0000 = No function is configured 0001 = Function A+B 0010 = Function A-B 0011 = Function A/B 0100 = Function A*B 0101 = Function PASS 0110 = Function REJECT 0111 = Function DEVIAT 1000 = Function MATH 1001 = Function PROP 1010 = Function ON/OFF 1011 = Function PID 1100 = Function "Time dosing" 1101 = Function "Volume dosing" The other values are reserved.
7...4	Function number	0001 = F1 0010 = F2 0011 = F3 0100 = F4 0101 = F5 0110 = F6 0111 = F7 1000 = F8 1001 = F9 1010 = F10 1011 = F11 1100 = F12 The other values are reserved.
3...0	Revision number of the data structure	0000 = previous revision 0001 = current revision The other values are reserved.

Example:

For the current revision number of the data structure, a function F4 configured as an ON/OFF function has the following ID:

$(1111\ 1010\ 0100\ 0001)_{bin} = (0xFA41)_{hex} = (64065)_{dec}$.

MAN 1000338748 EN Version: D Status: RL (released | freigegeben) printed: 13.09.2022

7.3 ID of the PVCs

Table 98: Bit distribution of variable ID of the PVCs

Bits of a PVC ID			
15...12	11...8	7...4	3...0

Table 99: Bit description of the variable ID of the PVCs

Bit range	Description	Values
15...12	PVC	1100
11...8	Reserved	0000
7...4	Version number of the data structure	0000
3...0	Revision number of the data structure	0001 = current revision The other values are reserved.

MAN 1000338748 EN Version: D Status: RL (released | freigegeben) printed: 13.09.2022

8 DESCRIPTION OF THE VARIABLE "STATUS"

The informations available in this chapter are only valid for the devices equipped with an Ethernet extension module M1 from data version A.01.

→ On the device Type 8619, check the data version in the menu "Information ----► Versions ----► M1: Ethernet ----► Data".

The variable "status" uses 2 bytes (16 bits) and is used:

- To indicate if the main board, the extension modules, the functions and the PVCs are present or not.
- To indicate if the main board, the extension modules, the functions and the PVCs are working correctly or not.
- To indicate the error and warning messages that have been generated by the device Type 8619.

→ Troubleshooting information related to the error and warning messages are given in the chapter "Maintenance" of the Operating Instructions Type 8619, available on the internet at: country.burkert.com

8.1 Status of the main board M0

8.1.1 Module status

Table 100: Bit distribution of variable "module status" of the main board M0

Module status bits										
15	14...9	8	7	6	5	4	3	2	1	0

Table 101: Bit description of variable "module status" of the main board M0

Bit range	Description	Values	Related error or warning messages in the Operating Instructions
15	Presence	0 = no main board plugged into slot M0 1 = the main board is plugged into slot M0	-
14...9	Reserved	0	-
8	Memory card problem	0 = the datalogging is working normally or is disabled	-
		1 = the memory card presents a problem	• "M0:MC read only" • "M0:MC failure" • "M0:MC full" • "M0:MC data loss" • "M0:MC missing"
7	Reserved	0	-
6	Warning event	0 = no problem	-
		1 = a function presents a problem (see status of the functions, chapter 8.8 to 8.14)	• "M0:W:ON/OFF time" • "M0:W:Pulse x lim." • "M0:W:Pulse x 1:1"
5	Reserved	0	-
4	Time lost	0 = no problem	-
		1 = the time is lost	"M0:W:Time lost"

MAN 1000338748 EN Version: D Status: RL (released | freigegeben) printed: 13.09.2022

Bit range	Description	Values	Related error or warning messages in the Operating Instructions
3	Factory data lost	0 = no problem	-
		1 = the factory data is lost	"Mx:E:Memory FR"
2	User data lost	0 = no problem	-
		1 = the user data is lost	• "Mx:E:Memory UR" • "Mx:E:Memory UW"
1	Calibration data lost	0 = no problem	-
		1 = the calibration data is lost	• "Mx:E:Memory CR" • "Mx:E:Memory CW"
0	Link lost	0 = no problem	-
		1 = the link to the main board is interrupted	"M0:E:Mx com."

8.1.2 M1-M3 status

Table 102: Bit distribution of variable "M1-M3 status" of the main board M0

M1-M3 status bits															
15	14	13	12	11	10	9	8	7	6	5	4	3	2	1	0

Table 103: Bit distribution of variable "M1-M3 status" of the main board M0

Bit range	Description	Values	Related error or warning messages in the Operating Instructions
15	Reserved	0	-
14	M3 calibration event	0 = no calibration event	-
		1 = the extension module plugged into slot M3 presents a calibration event	See Table 106
13	M3: warning event	0 = no warning event	-
		1 = the extension module plugged into slot M3 presents a warning event related to a sensor	See Table 106
12	M3: error event	0 = no error event	-
		1 = the extension module plugged into slot M3 presents an error event related to a sensor	See Table 106
11	M3: failure event	0 = no failure event	-
		1 = the extension module plugged into slot M3 presents a failure event related to the extension module	See Table 106
10	M3: run	0 = no extension module or extension module is missing	-
		1 = the extension module plugged into slot M3 is working properly	-
9	M2: calibration event	0 = no calibration event	-
		1 = the extension module plugged into slot M2 presents a calibration event	See Table 106

MAN 1000338748 EN Version: D Status: RL (released | freigegeben) printed: 13.09.2022

Bit range	Description	Values	Related error or warning messages in the Operating Instructions
8	M2: warning event	0 = no warning event	-
		1 = the extension module plugged into slot M2 presents a warning event related to a sensor	See Table 106
7	M2: error event	0 = no error event	-
		1 = the extension module plugged into slot M2 presents an error event related to a sensor	See Table 106
6	M2: failure event	0 = no failure event	-
		1 = the extension module plugged into slot M2 presents a failure event related to the extension module	See Table 106
5	M2: run	0 = no extension module or extension module is missing	-
		1 = the extension module plugged into slot M2 is working properly	-
4	M1: calibration event	0 = no calibration event	-
		1 = the extension module plugged into slot M1 presents a calibration event	See Table 106
3	M1: warning event	0 = no warning event	-
		1 = the extension module plugged into slot M1 presents a warning event related to a sensor	See Table 106
2	M1: error event	0 = no error event	-
		1 = the extension module plugged into slot M1 presents an error event related to the extension module	See Table 106
1	M1: failure event	0 = no failure event	-
		1 = the extension module plugged into slot M1 presents a failure event related to the device	See Table 106
0	M1: run	0 = no extension module or extension module is missing	-
		1 = the extension module plugged into slot M1 is working properly	-

MAN 1000338748 EN Version: D Status: RL (released | freigegeben) printed: 13.09.2022

8.1.3 M4-M6 status

Table 104: Bit distribution of variable "M4-M6 status" of the main board M0

M4-M6 status bits															
15	14	13	12	11	10	9	8	7	6	5	4	3	2	1	0

Table 105: Bit distribution of variable "M4-M6 status" of the main board M0

Bits	Description	Values	Related error or warning messages in the Operating Instructions
15	Reserved	0	-
14	M6: calibration event	0 = no calibration event	-
		1 = the extension module plugged into slot M6 presents a calibration event	See Table 106
13	M6: warning event	0 = no warning event	-
		1 = the extension module plugged into slot M6 presents a warning event related to a sensor	See Table 106
12	M6: error event	0 = no error event	-
		1 = the extension module plugged into slot M6 presents an error event related to a sensor	See Table 106
11	M6: failure event	0 = no failure event	-
		1 = the extension module plugged into slot M6 presents a failure event related to the extension module	See Table 106
10	M6: run	0 = no extension module or extension module is missing	-
		1 = the extension module plugged into slot M6 is working properly	-
9	M5: calibration event	0 = no calibration event	-
		1 = the extension module plugged into slot M5 presents a calibration event	See Table 106
8	M5: warning event	0 = no warning event	-
		1 = the extension module plugged into slot M5 presents a warning event related to a sensor	See Table 106
7	M5: error event	0 = no error event	-
		1 = the extension module plugged into slot M5 presents an error event related to a sensor	See Table 106
6	M5: failure event	0 = no failure event	-
		1 = the extension module plugged into slot M5 presents a failure event related to the extension module	See Table 106
5	M5: run	0 = no extension module or extension module is missing	-
		1 = the extension module plugged into slot M5 is working properly	-

MAN 1000338748 EN Version: D Status: RL (released | freigegeben) printed: 13.09.2022

Bits	Description	Values	Related error or warning messages in the Operating Instructions
4	M4: calibration event	0 = no calibration event	-
		1 = the extension module plugged into slot M4 presents a calibration event	See Table 106
3	M4: warning event	0 = no warning event	-
		1 = the extension module plugged into slot M4 presents a warning event related to a sensor	See Table 106
2	M4: error event	0 = no error event	-
		1 = the extension module plugged into slot M4 presents an error event related to a sensor	See Table 106
1	M4: failure event	0 = no failure event	-
		1 = the extension module plugged into slot M4 presents a failure event related to the extension module	See Table 106
0	M4: run	0 = no extension module or extension module is missing	-
		1 = the extension module plugged into slot M4 is working properly	-

MAN 1000338748 EN Version: D Status: RL (released | freigegeben) printed: 13.09.2022

Table 106 shows the possible error and warning messages for the events described in Table 103 and Table 105.

→ Troubleshooting information related to the error and warning messages are given in the chapter "Maintenance" of the Operating Instructions Type 8619, available on the internet at: country.burkert.com

Table 106: Messages related to calibration, warning, error and failure events

Type of event	Error or warning messages
Mx: calibration event	• "Mx:M:Time to cal." • "Mx:W:AI1 cal." • "Mx:W:AI2 cal." • "Mx:W:AI1 maint." • "Mx:W:AI2 maint."
Mx: warning event	• "Mx:W:AIx low" • "Mx:W:AIx high" • "Mx:W:Ref imped." • "Mx:W:Glass imped." • "Mx:W:Conductivity" • "Mx:W:Temperature" • "Mx:W:concent.OOR"
Mx: error event	• "Mx:E:AIx low" • "Mx:E:AIx high" • "Mx:E:AIx open" • "Mx:E:Glass imped." • "Mx:E:Ref imped." • "Mx:E:Conductivity" • "Mx:E:Temperature" • "Mx:E:RTD open"
Mx: failure event	• "Mx:E:ORP sat." • "Mx:E:pH sat." • "M0:E:Mx com." • "Mx:E:Memory FR" • "Mx:E:Memory UR" • "Mx:E:Memory UW" • "Mx:E:Memory CR" • "Mx:E:Memory CW" • "Mx:E:RTClock"

MAN 1000338748 EN Version: D Status: RL (released | freigegeben) printed: 13.09.2022

8.1.4 SystemSwitch

Table 107: Bit distribution of variable "SystemSwitch" of the main board M0

SystemSwitch bits	
15...1	0

Table 108: Bit distribution of variable " SystemSwitch" of the main board M0

Bit range	Description	Values
15...1	Reserved	0
0	SystemSwitch	0 = not active 1 = active

8.1.5 DI1 status / DI2 status

Table 109: Bit distribution of variables "DI1 status" / "DI2 status" of the main board M0

DI1 / DI2 status bits					
15	14	13...12	11...10	9...8	7...0

Table 110: Bit distribution of variable "DI1 Status" / "DI2 status" of the main board M0

Bit range	Description	Values
15	Software option activated	0 = the software option "flow" is not active. Only the bit 14 is valid. Ignore the other bits 13...0. 1 = the software option "flow" is active. Bits 14...0 are valid.
14	DI1 / DI2 status	0 = OFF 1 = ON
13...12	Totaliser B unit	00 = L 01 = m^3 10 = gal 11 = Impgal To change the unit, refer to the Operating Instructions.
11...10	Totaliser A unit	00 = L 01 = m^3 10 = gal 11 = Impgal To change the unit, refer to the Operating Instructions.
9...8	Flow unit	00 = L/min 01 = reserved 10 = gal/min 11 = Impgal/min To change the unit, refer to the Operating Instructions.
7...0	Reserved	0

MAN 1000338748 EN Version: D Status: RL (released | freigegeben) printed: 13.09.2022

8.2 Status of the Ethernet extension module M1

8.2.1 Module status

Table 111: Bit distribution of variable "Module status" of the Ethernet extension module

Module status bits					
15	14...4	3	2	1	0

Table 112: Bit distribution of variable "Module status" of the Ethernet extension module

Bit range	Description	Values	Related error or warning messages in the Operating Instructions
15	Presence	1 = the Ethernet extension module is plugged into slot M1	-
14...4	Reserved	0	-
3	Factory data lost	0 = no problem	-
		1 = the factory data is lost	"Mx:E:Memory FR"
2	User data lost	0 = no problem	-
		1 = the user data is lost	• "Mx:E:Memory UR" • "Mx:E:Memory UW"
1	Calibration data lost	0 = no problem	-
		1 = the calibration data is lost	• "Mx:E:Memory CR" • "Mx:E:Memory CW"
0	Link lost	0 = no problem	-
		1 = the link to the extension module is interrupted	"M0:E:Mx com."

8.3 Status of an empty slot on the device Type 8619

8.3.1 Module status

Table 113: Bit distribution of variable "Module status" on an empty slot of the device Type 8619

Module status bits
15...0

Table 114: Bit distribution of variable "Module status" on an empty slot of the device Type 8619

Bit range	Description	Values
15...0	Reserved	0

MAN 1000338748 EN Version: D Status: RL (released | freigegeben) printed: 13.09.2022

8.4 Status of the Input extension module

8.4.1 Module status

Table 115: Bit distribution of variable "Module status" of the Input extension module

Module status bits									
15	14...8	7	6	5	4	3	2	1	0

Table 116: Bit description of variable "Module status" of the Input extension module

Bit range	Description	Values	Related error or warning messages in the Operating Instructions
15	Presence	0 = no extension module plugged into the related slot	-
		1 = an extension module is plugged into the related slot	-
14...8	Reserved	0	-
7	Probe calibration	0 = neither AI1 nor AI2 present a calibration event	-
		1 = (see chapter 8.4.3 AI1 status / AI2 status)	• "W:AI1 maint." • "W:AI2 maint." • "W:AI1 cal." • "W:AI2 cal."
6	Probe warning	0 = neither AI1 nor AI2 present a warning event	-
		1 = (see chapter 8.4.3 AI1 status / AI2 status)	• "Mx:W:AIx low" • "Mx:W:AIx high"
5	Probe error	0 = neither AI1 nor AI2 present presents an error event	-
		1 = (see chapter 8.4.3 AI1 status / AI2 status)	• "Mx:E:AIx low" • "Mx:E:AIx high" • "Mx:E:AIx open"
4	Clock faulty	0 = no problem	-
		1 = the time is lost	"Mx:E:RTClock"
3	Factory data lost	0 = no problem	-
		1 = the factory data is lost	"Mx:E:Memory FR"
2	User data lost	0 = no problem	-
		1 = the user data is lost	• "Mx:E:Memory UR" • "Mx:E:Memory UW"
1	Calibration data lost	0 = no problem	-
		1 = the calibration data is lost	• "Mx:E:Memory CR" • "Mx:E:Memory CW"
0	Link lost	0 = no problem	-
		1 = the link to the extension module is interrupted	"M0:E:Mx com."

MAN 1000338748 EN Version: D Status: RL (released | freigegeben) printed: 13.09.2022

8.4.2 DI1 status / DI2 status

Table 117: Bit distribution of variable "DI1 status" / "DI2 status" of the Input extension module

DI1 / DI2 status bits					
15	14	13...12	11...10	9...8	7...0

Table 118: Bit distribution of variable "DI1 status" / "DI2 status" of the Input extension module

Bit range	Description	Values
15	Software option activated	0 = the software option "flow" is not active. Only the bit 14 is valid. Ignore the bits 13...0. 1 = the software option "flow" is active. Bits 14...0 are valid.
14	DI1 / DI2 status	0 = OFF 1 = ON
13...12	Totaliser B unit	00 = L 01 = m^3 10 = gal 11 = Impgal To change the unit, refer to the Operating Instructions.
11...10	Totaliser A unit	00 = L 01 = m^3 10 = gal 11 = Impgal To change the unit, refer to the Operating Instructions.
9...8	Flow unit	00 = L/min 01 = reserved 10 = gal/min 11 = Impgal/min To change the unit, refer to the Operating Instructions.
7...0	Reserved	0

8.4.3 AI1 status / AI2 status

Table 119: Bit distribution of variable "AI1 status" / "AI2 status" of the Input extension module

AI1 / AI2 status bits								
15	14...13	12...7	6	5	4	3	2...1	0

Table 120: Bit distribution of variable "AI1 status" / "AI2 status" of the Input extension module

Bit range	Description	Values	Related error or warning messages in the Operating Instructions
15	AI activated	0 = AI is not active (the parameter "Mode" is set to "None". Refer to the Operating Instructions)	-
		1 = AI is active	-
14...13	Reserved	0	-

MAN 1000338748 EN Version: D Status: RL (released | freigegeben) printed: 13.09.2022

Bit range	Description	Values	Related error or warning messages in the Operating Instructions
12...7	AI units	See chapter 9. To change the unit, refer to the Operating Instructions.	-
6	Raw unit	0 = V 1 = mA To change the unit, refer to the Operating Instructions.	-
5	Maintenance event	0 = the maintenance time for the related AI has not expired	-
		1 = the maintenance time for the related AI has expired	• "W:AI1 maint." • "W:AI2 maint."
4	Calibration event	0 = the calibration time for the related AI has not expired	-
		1 = the calibration time for the related AI has expired	• "W:AI1 cal." • "W:AI2 cal."
3	Open loop	0 = no open loop has been detected	-
		1 = an open loop has been detected on the AI configured in voltage mode	"Mx:E:AIx open"
2...1	Diagnostic	00 = the value of the AI is correct	-
		01 = the value of the AI is out of the warning range	• "Mx:W:AIx low" • "Mx:W:AIx high"
		1x = the value of the AI is out of the error range	• "Mx:E:AIx low" • "Mx:E:AIx high"
0	Diagnostic threshold	• If bits 2...1 = 00, then no meaning	-
		• If bits 2...1 = 01 - and bit 0 = 0: the low threshold of the warning range is exceeded - and bit 0 = 1: the high threshold of the warning range is exceeded	
		• If bits 2...1 = 10 or 11 - and bit 0 = 0: the low threshold of the error range is exceeded - and bit 0 = 1: the high threshold of the error range is exceeded	

MAN 1000338748 EN Version: D Status: RL (released | freigegeben) printed: 13.09.2022

8.5 Status of the Output extension module

8.5.1 Module status

Table 121: Bit distribution of variable "Module status" of the Output extension module

Module status bits					
15	14...4	3	2	1	0

Table 122: Bit description of variable "Module status" of the Output extension module

Bit range	Description	Values	Related error or warning messages in the Operating Instructions
15	Presence	0 = no extension module plugged into the related slot	-
		1 = the extension module is plugged into the related slot	-
14...4	Reserved	0	-
3	Factory data lost	0 = no problem	-
		1 = the factory data is lost	"Mx:E:Memory FR"
2	User data lost	0 = no problem	-
		1 = the user data is lost	• "Mx:E:Memory UR" • "Mx:E:Memory UW"
1	Calibration data lost	0 = no problem	-
		1 = the calibration data is lost	• "Mx:E:Memory CR" • "Mx:E:Memory CW"
0	Link lost	0 = no problem	-
		1 = the link to the extension module is interrupted	"M0:E:Mx com."

8.5.2 DO1 status / DO2 status

Table 123: Bit distribution of variable "DO1 status" / "DO2 status" of the Output extension module

DO1 / DO2 status bits	
15...3	2...0

Table 124: Bit distribution of variable "DO1 status" / "DO2 status" of the Output extension module

Bit range	Description	Values
15...3	Reserved	0
2...0	• If the digital output is configured in ON/OFF, hysteresis or window mode: digital output state	000 = OFF 001 = ON
	• If the digital output is configured in PWM, FastPWM or PFM: digital output mode	010 = PWM 011 = PFM

MAN 1000338748 EN Version: D Status: RL (released | freigegeben) printed: 13.09.2022

8.6 Status of the Conductivity extension module

8.6.1 Module status

Table 125: Bit distribution of variable "Module status" of the Conductivity extension module

Module status bits									
15	14...8	7	6	5	4	3	2	1	0

Table 126: Bit description of variable "Module status" of the Conductivity extension module

Bit range	Description	Values	Related error or warning messages in the Operating Instructions
15	Presence	0 = no extension module plugged into the related slot	-
		1 = the extension module is plugged into the related slot	-
14...8	Reserved	0	-
7	Probe calibration	0 = no probe on the extension module presents a calibration event	-
		1 = a probe on the extension module presents a calibration event (see chapter 8.6.3 Conductivity status)	"MxM:Time to cal."
6	Probe warning	0 = no probe on the extension module presents a warning event	-
		1 = a probe on the extension module presents a warning event (see chapter 8.6.2 Temperature status and 8.6.3 Conductivity status)	• "Mx:W:Temperature" • "Mx:W:Conductivity" • "W:concent.OOR"
5	Probe error	0 = no probe on the extension module presents an error event	-
		1 = a probe on the extension module presents an error event (see chapter 8.6.2 Temperature status and 8.6.3 Conductivity status)	• "Mx:E:Temperature" • "Mx:E:Conductivity" • "Mx:E:RTD open"
4	Clock faulty	0 = no problem	-
		1 = the clock is faulty	"Mx:E:RTClock"
3	Factory data lost	0 = no problem	-
		1 = the factory data is lost	"Mx:E:Memory FR"
2	User data lost	0 = no problem	-
		1 = the user data is lost	• "Mx:E:Memory UR" • "Mx:E:Memory UW"
1	Calibration data lost	0 = no problem	-
		1 = the calibration data is lost	• "Mx:E:Memory CR" • "Mx:E:Memory CW"
0	Link lost	0 = no problem	-
		1 = the link to the extension module is interrupted	"M0:E:Mx com."

MAN 1000338748 EN Version: D Status: RL (released | freigegeben) printed: 13.09.2022

8.6.2 Temperature status

Table 127: Bit distribution of variable "Temperature status" of the Conductivity extension module

Temperature status bits						
15	14...6	5	4	3	2...1	0

Table 128: Bit description of variable "Temperature status" of the Conductivity extension module

Bit range	Description	Values	Related error or warning messages in the Operating Instructions
15	Temperature sensor	0 = the temperature sensor is disabled, i.e. the parameter RTD on the device is set to None. Ignore the bits 14...0.	-
		1 = the temperature sensor is enabled, i.e. the parameter RTD on the device is different from None. The following bits 14...0 are valid.	-
14...6	Reserved	0	-
5	Temperature unit	0 = °C 1 = °F To change the unit, refer to the Operating Instructions.	-
4	Reserved	0	-
3	RTD open	0 = the temperature sensor is working	-
		1 = the temperature sensor is not connected to the extension module	"Mx:E:RTD open"
2...1	Diagnostic	00 = the value of the temperature sensor is correct	-
		01 = the value of the temperature sensor is out of the warning range	"Mx:W:Temperature"
		1x = the value of the temperature sensor is out of the error range	"Mx:E:Temperature"
0	Diagnostic threshold	• If bits 2...1 = 00, then no meaning	-
		• If bits 2...1 = 01 - and bit 0 = 0: the low threshold of the warning range is exceeded - and bit 0 = 1: the high threshold of the warning range is exceeded	
		• If bits 2...1 = 10 or 11 - and bit 0 = 0: the low threshold of the error range is exceeded - and bit 0 = 1: the high threshold of the error range is exceeded	

MAN 1000338748 EN Version: D Status: RL (released | freigegeben) printed: 13.09.2022

8.6.3 Conductivity status

Table 129: Bit distribution of variable "Conductivity status" of the Conductivity extension module

Conductivity status bits						
15	14...7	6...5	4	3	2...1	0

Table 130: Bit description of variable "Conductivity status" of the Conductivity extension module

Bit range	Description	Values	Related error or warning messages in the Operating Instructions
15	Reserved	1	-
14...7	Reserved	0	-
6...5	Alarm USP	00 = OK	-
		01 = > Max	-
		10 = Alarm USP	-
		11 = reserved	-
4	Calibration event	0 = no calibration is due for the sensor connected to the extension module	-
		1 = a calibration is due for the sensor connected to the extension module	"MxM:Time to cal."
3	Out of range	0 = the conductivity sensor is working	-
		1 = the fluid conductivity or the fluid concentration is outside the calculation range	• "Mx:W:Conductivity" • "W:concent.OOR"
2...1	Diagnostic	00 = the value of the conductivity sensor is correct	-
		01 = the value of the conductivity sensor is out of the warning range	"Mx:W:Conductivity"
		1x = the value of the conductivity sensor is out of the error range	"Mx:E:Conductivity"
0	Diagnostic threshold	• If bits 2...1 = 00, then no meaning	-
		• If bits 2...1 = 01 - and bit 0 = 0: the low threshold of the warning range is exceeded - and bit 0 = 1: the high threshold of the warning range is exceeded	
		• If bits 2...1 = 10 or 11 - and bit 0 = 0: the low threshold of the error range is exceeded - and bit 0 = 1: the high threshold of the error range is exceeded	

MAN 1000338748 EN Version: D Status: RL (released | freigegeben) printed: 13.09.2022

8.7 Status of the pH/ORP extension module

8.7.1 Module status

Table 131: Bit distribution of variable "Module status" of the pH/ORP extension module

Module status bits									
15	14...8	7	6	5	4	3	2	1	0

Table 132: Bit description of variable "Module status" of the pH/ORP extension module

Bit range	Description	Values	Related error or warning messages in the Operating Instructions
15	Presence	0 = no extension module plugged into the related slot	-
		1 = the extension module is plugged into the related slot	-
14...8	Reserved	0	-
7	Probe calibration	0 = no probe on the extension module presents a calibration event	-
		1 = a probe on the extension module presents a calibration event (see chapter 8.7.3 pH/ORP status)	"MxM:Time to cal."
6	Probe warning	0 = no probe on the extension module presents a warning event	-
		1 = a probe on the extension module presents an warning event (see chapters 8.7.2 Temperature status and 8.7.3 pH/ORP status)	• "Mx:W:Temperature" • "Mx:W:Glass imped." • "Mx:W:Ref imped."
5	Probe error	0 = no probe on the extension module presents an error event	-
		1 = a probe on the extension module presents an error event (see chapters 8.7.2 Temperature status and 8.7.3 pH/ORP status)	• "Mx:E:ORP sat." • "Mx:E:pH sat." • "Mx:E:RTD open" • "Mx:E:Temperature" • "Mx:E:Glass imped." • "Mx:E:Ref imped."
4	Clock faulty	0 = no problem	-
		1 = the clock is faulty	"Mx:E:RTClock"
3	Factory data lost	0 = no problem	-
		1 = the factory data is lost	"Mx:E:Memory FR"
2	User data lost	0 = no problem	-
		1 = the user data is lost	• "Mx:E:Memory UR" • "Mx:E:Memory UW"
1	Calibration data lost	0 = no problem	-
		1 = the calibration data is lost	• "Mx:E:Memory CR" • "Mx:E:Memory CW"
0	Link lost	0 = no problem	-
		1 = the link to the extension module is interrupted	"M0:E:Mx com."

MAN 1000338748 EN Version: D Status: RL (released | freigegeben) printed: 13.09.2022

8.7.2 Temperature status

Table 133: Bit distribution of variable "Temperature status" of the pH/ORP extension module

Temperature status bits									
15	14...6	7	6	5	4	3	2	1	0

Table 134: Bit description of variable "Temperature status" of the pH/ORP extension module

Bit range	Description	Values	Related error or warning messages in the Operating Instructions
15	Temperature sensor	0 = the temperature sensor is disabled, i.e. the parameter RTD on the device is set to None. Ignore the bits 14...0.	-
		1 = the temperature sensor is enabled, i.e. the parameter RTD on the device is different from None. The following bits 14...0 are valid.	-
14...6	Reserved	0	-
5	Temperature unit	0 = °C 1 = °F To change the unit, refer to the Operating Instructions.	-
4	Reserved	0	-
3	RTD open	0 = the temperature sensor is working	-
		1 = the temperature sensor is not connected to the extension module	"Mx:E:RTD open"
2...1	Diagnostic	00 = the value of the temperature sensor is correct	-
		01 = the value of the temperature sensor is out of the warning range	"Mx:W:Temperature"
		1x = the value of the temperature sensor is out of the error range	"Mx:E:Temperature"
0	Diagnostic threshold	• If bits 2...1 = 00, then no meaning	-
		• If bits 2...1 = 01 - and bit 0 = 0: the low threshold of the warning range is exceeded - and bit 0 = 1: the high threshold of the warning range is exceeded	
		• If bits 2...1 = 10 or 11 - and bit 0 = 0: the low threshold of the error range is exceeded - and bit 0 = 1: the high threshold of the error range is exceeded	

MAN 1000338748 EN Version: D Status: RL (released | freigegeben) printed: 13.09.2022

8.7.3 pH/ORP status

Table 135: Bit distribution of variable "pH/ORP status" of the pH/ORP extension module

pH/ORP status bits								
15	14...9	8	7	6	5...4	3	2...1	0

Table 136: Bit description of variable " pH/ORP status" of the pH/ORP extension module

Bit range	Description	Values	Related error or warning messages in the Operating Instructions
15	Reserved	1	-
14...9	Reserved	0	-
8	Calibration event	0 = no calibration is due for the sensor connected to the extension module	-
		1 = a calibration is due for the sensor connected to the extension module	MxM:Time to cal."
7	pH saturation	0 = the pH value is being correctly measured	-
		1 = the pH value is not correctly measured due to saturation of the input stage of the measuring board	"Mx:E:pH sat."
6	ORP saturation	0 = the ORP value is being correctly measured	-
		1 = the ORP value is not correctly measured due to saturation of the input stage of the measuring board	"Mx:E:ORP sat."
5...4	Diagnostic impedance of the glass electrode	00 = the impedance of the glass electrode is correct	-
		01 = the impedance of the glass electrode is out of the warning range	"Mx:W:Glass imped."
		1x = the impedance of the glass electrode is out of the error range	"Mx:E:Glass imped."
3	Diagnostic threshold	• If bits 5...4 = 00, then no meaning	-
		• If bits 5...4 = 01 - and bit 0 = 0: the low threshold of the warning range is exceeded - and bit 0 = 1: the high threshold of the warning range is exceeded	
		• If bits 5...4 = 10 or 11 - and bit 0 = 0: the low threshold of the error range is exceeded - and bit 0 = 1: the high threshold of the error range is exceeded	
2...1	Diagnostic impedance of the reference electrode	00 = the impedance of the reference electrode is correct	-
		01 = the impedance of the reference electrode is out of the warning range	"Mx:W:Ref imped."
		1x = the impedance of the reference electrode is out of the error range	"Mx:E:Ref imped."

MAN 1000338748 EN Version: D Status: RL (released | freigegeben) printed: 13.09.2022

Bit range	Description	Values	Related error or warning messages in the Operating Instructions
0	Diagnostic threshold	• If bits 2...1 = 00, then no meaning	-
		• If bits 2...1 = 01 - and bit 0 = 0: the low threshold of the warning range is exceeded - and bit 0 = 1: the high threshold of the warning range is exceeded	
		• If bits 2...1 = 10 or 11 - and bit 0 = 0: the low threshold of the error range is exceeded - and bit 0 = 1: the high threshold of the error range is exceeded	

8.8 Status of the "None" function

Table 137: Bit distribution of variable "Function status" of the "None" function

Function status bits
15...0

Table 138: Bit description of variable "Function status" of the "None" function

Bit range	Description	Values
15...0	Reserved	0

8.9 Status of the functions A+B / A-B / A/B / A*B / MATH / PASS / REJECT / DEVIAT

*Table 139: Bit distribution of variable "Function status" of the functions A+B / A-B / A/B / A*B / MATH / PASS / REJECT / DEVIAT*

Function status bits		
15	**14...6**	**5...0**

*Table 140: Bit description of variable "Function status" of the functions A+B / A-B / A/B / A*B / MATH / PASS / REJECT / DEVIAT*

Bit range	Description	Values
15	State	0 = the function is not active. Ignore the other bits and the result field. 1 = the function is active and normally calculated
14...6	Reserved	0
5...0	Unit of the result, as set in the function parameters	Refer to chapter 9. To change the unit, refer to the Operating Instructions.

MAN 1000338748 EN Version: D Status: RL (released | freigegeben) printed: 13.09.2022

8.10 Status of the function "PROP"

Table 141: Bit distribution of variable "Function status" of the function "PROP"

Function status bits			
15	14	13	12...0

Table 142: Bit description of variable "Function status" of the function "PROP"

Bit range	Description	Values
15	State	0 = the function is not active. Ignore the other bits and the result field. 1 = the function is active and normally calculated
14	System Switch	0 = normal operation
		1 = the variable "Command" of the function gives the fallback position value set in the device
13	Auto/manu	0 = the automatic operation is activated for the function. Refer to the Operating Instructions of the device.
		1 = the manual operation is activated for the function. Refer to the Operating Instructions of the device.
12...0	Reserved	0

8.11 Status of the function ON/OFF

Table 143: Bit distribution of variable "Function status" of the function ON/OFF

Function status bits						
15	14	13	12...10	9...7	6	5...0

Table 144: Bit description of variable "Function status" of the function ON/OFF

Bit range	Description	Values	Related error or warning messages in the Operating Instructions
15	State	0 = the function is not active. Ignore the other bits and the result field. 1 = the function is active and normally calculated	-
14	System Switch	0 = normal operation	-
		1 = the variable "Command" of the function gives the fallback position value set in the device	-
13	Auto/manu	0 = the automatic operation is activated for the function. Refer to the Operating Instructions of the device.	-
		1 = the manual operation is activated for the function. Refer to the Operating Instructions of the device.	-
12...10	Reserved	0	-

MAN 1000338748 EN Version: D Status: RL (released | freigegeben) printed: 13.09.2022

Bit range	Description	Values	Related error or warning messages in the Operating Instructions
9...7	Tdos state	000 = OFF	-
		001 = prebleed in progress	-
		010 = ON	-
		011 = WAIT	-
		100 = WAIT + ON	-
		101 = error	-
		110 = no link	-
		The other values are reserved.	-
6	Value of the "Max-ONtime" parameter	0 = no problem	-
		1 = the duration defined for the "MaxONtime" parameter of the ON/OFF function has been exceeded	"M0:W:ON/OFF time"
5...0	Unit of the setpoint, as set in the function parameters	Refer to chapter 9	-

8.12 Status of the function PID

Table 145: Bit distribution of variable "Function status" of the function PID

Function status bits				
15	14	13	12...6	5...0

Table 146: Bit description of variable "Function status" of the function PID

Bit range	Description	Values
15	State	0 = the function is not active. Ignore the other bits and the result field. 1 = the function is active and normally calculated
14	System Switch	0 = normal operation
		1 = the variable "Command" of the function gives the fallback position value set in the device
13	Auto/manu	0 = the automatic operation is activated for the function. Refer to the Operating Instructions of the device.
		1 = the manual operation is activated for the function. Refer to the Operating Instructions of the device.
12...6	Reserved	0
5...0	Unit of the setpoint, as set in the function parameters	Refer to chapter 9

MAN 1000338748 EN Version: D Status: RL (released | freigegeben) printed: 13.09.2022

8.13 Status of the function "Time dosing"

Table 147: Bit distribution of variable "Function status" of the function "Time dosing"

Function status bits			
15	14	13	12...0

Table 148: Bit description of variable "Function status" of the function "Time dosing"

Bit range	Description	Values
15	State	0 = the function is not active. Ignore the other bits and the result field. 1 = the function is active and normally calculated
14	System Switch	0 = normal operation
		1 = the variable "Command" of the function gives the fallback position value set in the device
13	Auto/manu	0 = the automatic operation is activated for the function. Refer to the Operating Instructions of the device.
		1 = the manual operation is activated for the function. Refer to the Operating Instructions of the device.
12...0	Reserved	0

8.14 Status of the function "Volume dosing"

Table 149: Bit distribution of variable "Function status" of the function "Volume dosing"

Function status bits				
15	14	13	12...6	5...0

Table 150: Bit description of variable "Function status" of the function "Volume dosing"

Bit range	Description	Values
15	State	0 = the function is not active. Ignore the other bits and the result field. 1 = the function is active and normally calculated
14	System Switch	0 = normal operation
		1 = the variable "Command" of the function gives the fallback position value set in the device
13	Auto/manu	0 = the automatic operation is activated for the function. Refer to the Operating Instructions of the device.
		1 = the manual operation is activated for the function. Refer to the Operating Instructions of the device.
12...6	Reserved	0
5...0	Unit of the setpoint and unit of the volume dosing. Both units are set in the function parameters. Refer to the Operating Instructions.	Refer to chapter 9

MAN 1000338748 EN Version: D Status: RL (released | freigegeben) printed: 13.09.2022

8.15 Status of the PVC

Table 151: Bit distribution of variable "PVC status"

PVC status bits		
15	14...6	5...0

Table 152: Bit description of variable "PVC status"

Bit range	Description	Values
15	State	0 = the PVC is not active
		1 = the PVC is active
14...6	Reserved	0
5...0	Unit of the PVC. Refer to the Operating Instructions.	Refer to chapter 9

MAN 1000338748 EN Version: D Status: RL (released | freigegeben) printed: 13.09.2022

9 UNITS

Table 153 shows the relation between the 6-bits code sent to the PLC and the units set in the device.

The 6-bits code are used:

- in the variables "AI1 status" and "AI2 status" of the Input extension module. Refer to chapter 8.4.3.
- in the variable "function status" of the functions A+B / A-B / A/B / A*B / MATH / PASS / REJECT / DEVIAT. Refer to chapter 8.9.
- in the variable "function status" of the function ON/OFF. Refer to chapter 8.11.
- in the variable "function status" of the function PID. Refer to chapter 8.12.
- in the variable "function status" of the function Volume dosing. Refer to chapter 8.14.
- in the variable "PVC status". Refer to chapter 8.15.

Table 153: Values of the units

Bits (bin)	Decimals	Unit
000000	0	No unit
000001	1	Hz
000010	2	L/h
000011	3	L/min
000100	4	L/s
000101	5	m3/h
000110	6	m3/min
000111	7	m3/s
001000	8	GPH
001001	9	GPM
001010	10	GPS
001011	11	ImpGPH
001100	12	ImpGPM
001101	13	ImpGPS
001110	14	L
001111	15	m3
010000	16	gal
010001	17	Impgal
010010	18	°C
010011	19	°F
010100	20	µS/cm
010101	21	mS/cm
010110	22	S/cm
010111	23	Ω.cm
011000	24	kΩ.cm
011001	25	MΩ.cm
011010	26	Ω

MAN 1000338748 EN Version: D Status: RL (released | freigegeben) printed: 13.09.2022

Bits (bin)	Decimals	Unit
011011	27	kΩ
011100	28	pH
011101	29	ppm
011110	30	%
011111	31	mV
100000	32	V
100001	33	mA
100010	34	E-12
100011	35	E-9
100100	36	E-6
100101	37	E-3
100110	38	E0
100111	39	E3
101000	40	E6
101001	41	E9
101010	42	E12
101011	43	ON/OFF
101100	44	µg/L
101101	45	mg/L
101110	46	g/L
101111	47	µmol/L
11000	48	mmol/L
110001	49	mol/L
110010...111110	50...62	Reserved
111111	63	Custom

MAN 1000338748 EN Version: D Status: RL (released | freigegeben) printed: 13.09.2022

bürkert
FLUID CONTROL SYSTEMS

MAN 1000338748 EN Version: D Status: RL (released | freigegeben) printed: 13.09.2022

www.burkert.com